THE IDEAL INSTALLATION & SERVICING MANUAL

Concord

CXAP 40 - 100

Installers guide to commercial central heating boilers

spares & parts online
IBASIS.co.uk©

Ideal BOILERS

CONTENTS

Air Supply. 8

Boiler Assembly - exploded view. 9

Boiler Clearances. 5

Burner Assemblies - exploded views.
CXAP 40-80. 22
CXAP 90-100. 22

Casing Assembly. 11

Chimney System. 8

Commissioning & Testing. 17

Electrical Connections. 13

Electrical Supply. 8

Fault Finding. 28

Gas Safety Regulations 2

Gas Supply. 8

Hydraulic Resistance. 5

Initial Lighting. 17

Installation. 9

Mandatory Requirements. 7

Option Kits. 4

Pump. 6

Servicing. 19

Short List of Parts. 30

Site Assembled Boilers. 26

Static Head Requirements. 6

System Connections. 11

Ventilation. 8

Water Circulation. 4

Water Connections. 4

Water Treatment. 6

Wiring Diagrams. 14

INTRODUCTION

CONSTRUCTION

Boiler body

The sectional boiler body is of cast iron and is supplied assembled on a sheet steel combustion chamber with an integral draught diverter. The boiler can be supplied in sectioned form to special order for site assembly - refer to the section headed 'Instructions for Site Assembled Boilers'.

Casing

The casing is manufactured in stove enamelled sheet steel and is easily assembled on site.

Burners

The 3 burners are of stainless steel construction.

Gas Safety (Installation and Use) Regulations, 1994, Statutory Instrument No. 1886 or rules in force.

It is the law that **all** gas appliances are installed and serviced by a CORGI registered installer (identified by ❀) in accordance with the above regulations. Failure to install appliances correctly could lead to prosecution. It is in your own interest, and that of safety, to ensure that the law is complied with.

The **Concord CXAP 40-100** range of boilers has been tested and certified by British Gas to prEN656 for use with ***PROPANE only.***

Multiple boiler installations

The **Concord CXAP range** is certificated for use in multiple boiler installations, providing that the following conditions are satisfied.

1. A downdraught thermostat kit MUST be fitted to ALL boilers in the installation.
2. A maximum of 6 boilers may be used with a single flue header.
3. For clearances see Frame 2.

A comprehensive guide to multiple installations of Concord CXAP boilers is available.

WARNING. Failure to use a downdraught kit on every boiler in a multiple boiler installation will negate the certification of the installation and therefore contravene the essential requirements of the Gas Appliance Directive.

Note. ***Concord CXAP 40, CXAP 50 and CXAP 60*** *boilers are intended for use as COMMERCIAL BOILERS and are NOT certified for use in domestic applications. A domestic installation is defined as an installation where the boiler takes its combustion air from a living space or from a room directly or indirectly connected with the living space. It is important, therefore, that no external control devices - e.g. flue dampers, economisers etc., are directly connected to this appliance unless covered by these Installation and Servicing Instructions or otherwise recommended by* **Caradon Plumbing Limited** *in writing. If in doubt, please enquire.*

Any direct connection of a control device not approved by **Caradon Plumbing Limited** *could invalidate the British Gas Certification, the normal appliance warranty and could also infringe the Gas Safety Regulations. Table 1, Table 2 and the descriptive notes which follow contain all the essential data likely to be required by the installer.*

CAUTION. To avoid the possibility of injury during the installation, servicing or cleaning of this appliance care should be taken when handling edges of sheet steel components.

Table 1- Performance Data

Boiler			CXAP 40	CXAP 50	CXAP 60	CXAP 70	CXAP 80	CXAP 90	CXAP 100
Number of sections			3	4	4	5	5	6	6
Boiler input	Nett	kW	48.4	57.3	69.6	79.8	96.0	103.4	119.5
		Btu/hr x 1000	165.1	195.4	237.5	272.2	327.5	352.8	407.7
	Gross	kW	52.5	62.1	75.5	86.5	104.1	112.15	129.6
		Btu/hr x 1000	179.1	211.9	257.6	295.1	355.2	382.7	442.2
Boiler output to water		kW	42.0	49.68	60.4	69.2	83.28	89.72	103.68
		Btu/hr x 1000	143.3	169.5	206.1	236.1	284.2	306.1	353.8
Gas rate		m^3/h	1.98	2.34	2.83	3.26	3.92	4.22	4.88
		ft^3/h	69.9	82.6	99.9	115.1	138.4	149.0	172.3
Approximate flue gas volume in the secondary flue of the chimney system	6.0% CO_2 & 150°C.	m^3/sec	0.051	0.060	0.073	0.083	0.099	0.108	0.125
	6.5% CO_2 & 302°F.	$ft.^3m$	108	127	155	176	210	229	265
Manifold setting pressure		mbar	35.7	35.3	35.5	35.8	35.2	35.4	34.8
		in.w.g.	14.3	14.2	14.3	14.4	14.2	14.2	14.0
Seasonal efficiency (SEDBUK)*			[78.2]%	[78.6]%	[79.7]%	[78.8]%	[79.4]%	[79.6]%	[80.0]%

*The value is used in the UK government's Standard Assessment Procedure (SAP) for energy rating of dwellings.
The test data from which it has been calculated have been certified by BGplc 0087.

Note. *To obtain gas consumption in l/s (ft^3/h) divide gross heat input in kW(Btu/h) by the gross CV of the gas in MJ/m^3 (Btu/ft^3). The gross CV is the value quoted by the gas supplier.*

Table 2 - General Data

Boiler		CXAP 40	CXAP 50	CXAP 60	CXAP 70	CXAP 80	CXAP 90	CXAP 100
Number of sections		3	4	4	5	5	6	6
Flow tappings	Rc (in. BSP)	2 x 2 at rear						
Return tappings	Rc (in. BSP)	2 x 2 at rear						
Maximum static head	metres (feet)	61 (200)						
Maximum pressure	bar (p.s.i.)	6.0 (87)						
Gas inlet connection	Rc (in. BSP)	3/4 (3/4)					1 (1)	
Dynamic gas pressure required at boiler inlet	mbar *gauge*	37.0	37.0	37.0	37.0	37.0	37.0	37.0
	in.w.g.	14.9	14.9	14.9	14.9	14.9	14.9	14.9
Electricity supply		230 Volts- single phase, 50 Hz, fuse 5 A						
Nominal flue size (to BS. 835)	mm	150	150	175	175	200	200	200
	in.	6	6	7	7	8	8	8
Diverter outlet socket internal diameter	mm	184	184	213	213	238	238	238
	in.	7.3	7.3	8.4	8.4	9.4	9.4	9.4
Length of burner bars (overall)	mm	377	497	497	617	617	737	737
	in.	14.8	19.5	19.5	24.3	24.3	29.0	29.0
Main burner injectors (3 off)	size, mm	2.15	2.3	2.54	2.69	2.96	3.09	3.27
Approximate dry weight	kg	210	265	265	330	330	395	395
	lb.	463	584	584	727	727	871	871
Water content	litre	22	30	30	37	37	45	45
	gal.	4.8	6.6	6.6	8.2	8.2	9.9	9.9

GAS CONTROLS

Control is by automatic ignition of intermittent pilot; once the presence of a flame has been proved the main gas valve opens to give full heat input. The mains voltage supply is via a terminal plug connection at the control box.

A 4 minute anti-cycle delay is built in to the controls to prevent rapid cycling. A preset overheat thermostat is also provided.

ELECTRICAL CONTROLS

The boiler is supplied with 2 printed circuit boards; Board S4561B1054 is the ignition board containing the flame proving logic and the on-board spark generator. Board W4115A1020 contains the electronic thermostat and the pump overrun timer. A preset overheat thermostat is also fitted. The control box displays neons indicating boiler status as follows:

- Boiler on
- Lockout
- Overheat

FROST PROTECTION

Frost protection is incorporated in the boiler as long as there is a permanent live supply wired to terminal L1 on the terminal plug-in connection at the control box and the boiler thermostat knob is not switched to off.

If the temperature sensed by the boiler thermostat falls to about 5°C the boiler will fire until the temperature reaches 18°C. Note that this is designed to protect the boiler and may not necessarily protect the remote parts of the system.

OPTION KITS

Remote indication kit

This kit gives the facility of remote indication of the boiler status.

Pressure gauge kit

An optional pressure gauge is also available for the range of boilers. Details for fitting are included with the pressure gauge.

Downdraught thermostat kit

This kit is optional when used on a single CXAP installation, but mandatory when used on a multiple boiler installation.

DUTY

The range of boilers is suitable for: Combined indirect pumped domestic hot water ***and*** central heating systems; independent indirect pumped domestic hot water ***or*** central heating systems.

Fully pumped systems may be open vented or sealed.

The range of boilers is NOT suitable for:

1. Gravity DHW systems.
2. Gravity heating systems.
3. Direct domestic hot water supply.

WATER CIRCULATION SYSTEM

Due to the compact nature of the boiler the heat stored within the castings at the point of shutdown of the burner must be dissipated into the water circuit in order to avoid the overheat thermostat tripping. In order to allow pump operation after burner shutdown the boiler control box incorporates a pump overrun facility which operates for approximately 6 minutes after burner shutdown and, in order to make use of this, the pump must be wired to the appropriate terminal L2 (pump) in the boiler control box.

1. The minimum flow rate as given in Table 4 must be maintained whenever the boiler is firing and during the pump overrun period.

2. During the period of pump overrun there must be an open circuit of adequate water volume and/or load. The minimum size of this circuit is given by the use of Graph 1.

   Examples shown on Graph 1

   a. For the **CXAP 90 and CXAP 100** the minimum circuit during pump overrun could be a load of 6 kW with a volume of 31 litres or any other combination given by the relevant line.

   b. For the **CXAP 70 and CXAP 80** the minimum circuit during pump overrun could be a load of 2 kW with a volume of 45 litres or any other combination given by the relevant line.

1 WATER CONNECTIONS

Flow and return connections are 2" BSP.

A 1" BSP tapping is provided in the redundant return flange for the cold feed or expansion vessel connection.

Safety Valve

A safety valve must be sized and fitted in accordance with BS. 6644 for every type of system. The valve should be set at 0.7 bar (10 lb/in.^{2}) above the operating pressure in the boiler. The maximum safety valve setting is 0.7 bar (10 lb/in.^{2}) above the maximum design operating pressure of 6.0 bar (87 lb/in.^{2}).

Cold Feed/Open Vent

The independent cold feed and the open vent must comply with BS. 6644 and be of the following minimum size.

Boiler Size	Cold Feed	Open Vent
CXAP 40 - 50	3/4"	1"
CXAP 60 -100	1"	1 1/4"

Sealed system filling point - refer to Frame 8

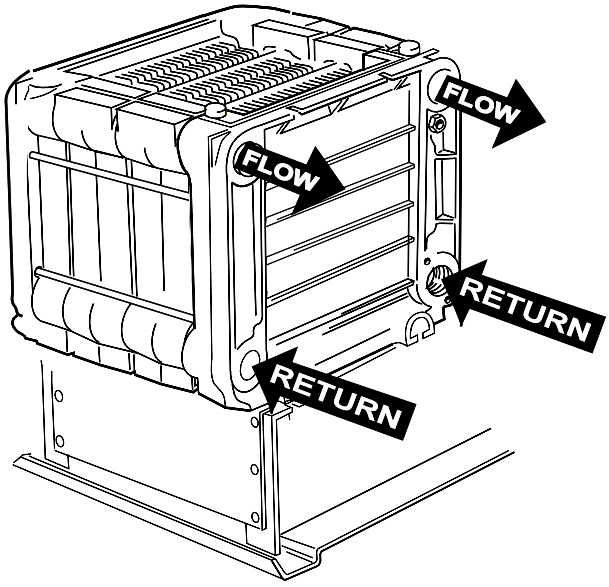

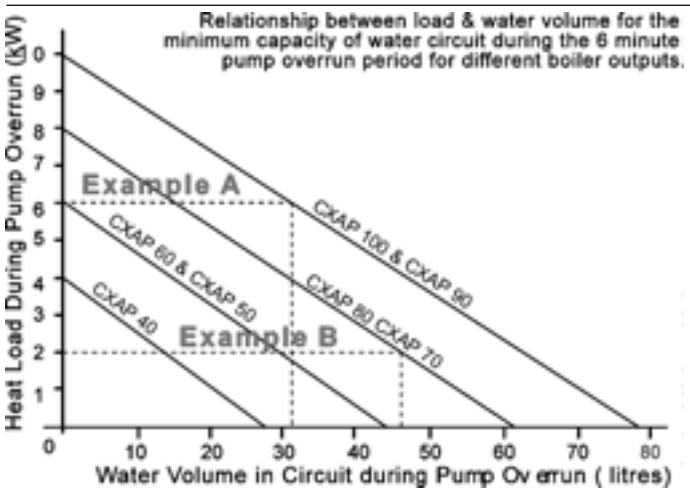

Graph 1 - Heat load / water volume

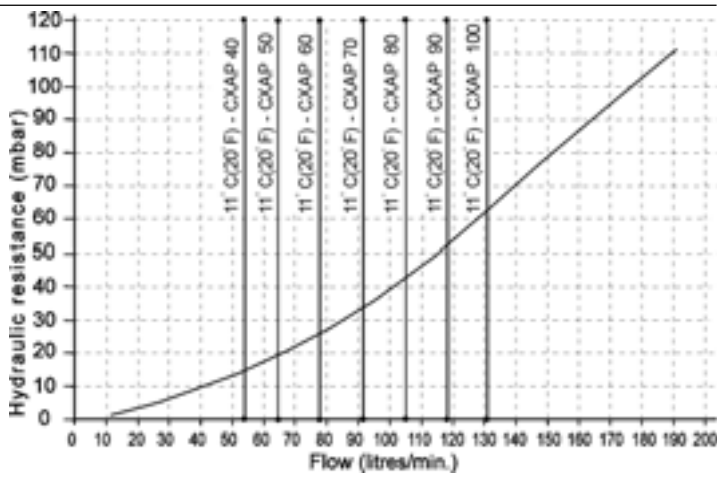

Graph 2 - Hydraulic Resistance

2 CLEARANCES & DIMENSIONS

Table 3

Boiler Size		CXAP 40	CXAP 50	CXAP 60	CXAP 70	CXAP 80	CXAP 90	CXAP 100
Front clearance	mm (in)	750 (29 1/2)						
Rear clearance	mm (in)	0	0	0	150 (6)	150 (6)	300 (12)	300 (12)
Side clearance	mm (in)	50 (2)	50 (2)	50 (2)	50 (2)	50 (2)	100 (4)	100 (4)
Dimension **A**	mm (in)	750 (29 1/2)	882 (34 3/4)	882 (34 3/4)	1042 (41)	1042 (41)	1212 (47 3/4)	1212 (47 3/4)
Dimension **B**	mm (in)	108 (4 1/4)	108 (4 1/4)	122.5 (4 7/8)	122.5 (4 7/8)	135 (5 3/8)	190 (7 1/2)	190 (7 1/2)
Dimension **C**	mm (in)	931.6 (36 5/8)	931.6 (36 5/8)	931.6 (36 5/8)	931.6 (36 5/8)	931.6 (36 5/8)	893.6(35 3/16)	893.6(35 3/16)
Dimension **D**	mm (in)	177.5 (7)	187.5 (7 3/8)	187.5 (7 3/8)	224.5 (8 7/8)	224.5 (8 7/8)	271.5 (10 5/8)	271.5 (10 5/8)
Dimension **E**	mm (in)	69.0 (2 3/4)	79.0 (3 1/8)	79.0 (3 1/8)	116.0 (4 5/8)	116.0 (4 5/8)	163.0 (6 1/2)	163.0 (6 1/2)

POSITION OF BOILER

Minimum clearances required from walls or other fixed objects to allow for the free access of combustion air are shown in Table 3 above.

However, for maintenance purposes we suggest a minimum rear clearance of 50mm.

Any combustible material adjacent to the boiler and its flue system must be so placed or shielded as to ensure that its temperature does not exceed 65°C (150 °F).

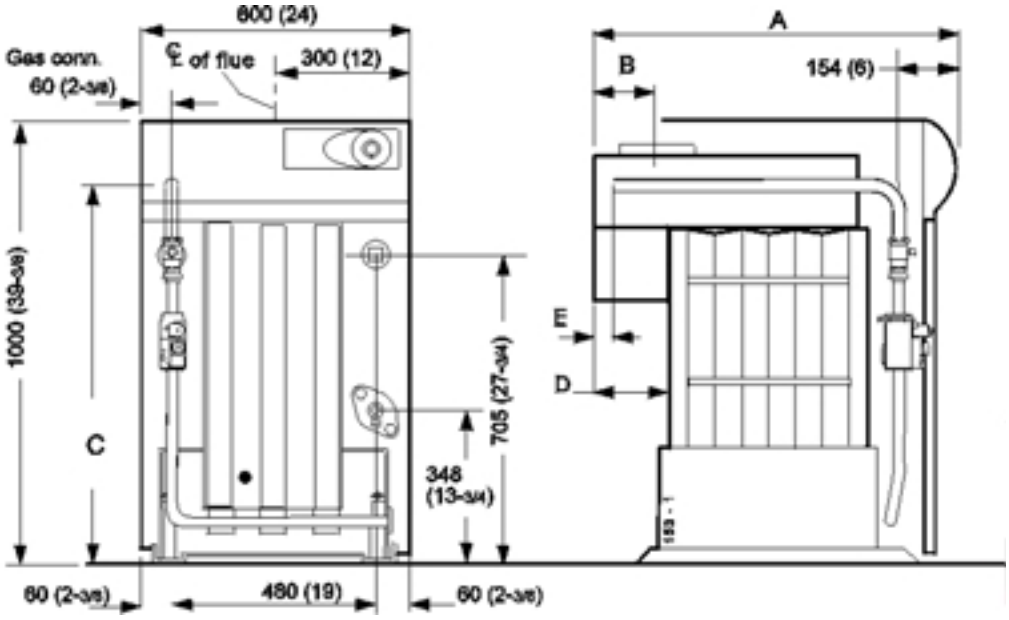

MULTIPLE BOILER INSTALLATIONS

The minimum installation clearances must conform to the dimensions given below:

CXAP 40, 50, 60, 70 & 80

Clearance between boilers = 50mm
Clearance at both ends of the multiple installation = 50mm*

CXAP 90 & 100

Clearance between boilers = 100mm
Clearance at both ends of the multiple installation = 100mm*

Rear clearance: sufficient clearance should be given at the rear of the boiler for connection of gas and water pipework.

*Additional clearance is required for access at either end of the installation.

The above circuit capacity during pump overrun may be achieved either by provision of an adequate bypass circuit or by ensuring that a zone of suitable size is open for circulation during this period by relevant control of zone valves or pumps.

The wiring diagrams in Frames 16,17 &18 illustrate the control methods for achieving the above.

3. Pump selection should take account of the hydraulic resistance given in Graph 2.

Table 4 - Flow rates for fully pumped systems

Boiler	Minimum flow rates for a temperature difference of 35°C (63°F) l/s	g.p.m.
CXAP 40	0.28	3.7
CXAP 50	0.34	4.5
CXAP 60	0.41	5.4
CXAP 70	0.48	6.3
CXAP 80	0.55	7.3
CXAP 90	0.62	8.2
CXAP 100	0.68	9

PUMP POSITIONS

Whenever practically possible the circulating pump(s) should be positioned so that it pressurises the system being served. The vertical distance between the pump(s) and any cold feed and expansion cistern MUST comply with the pump manufacturers requirements in order to avoid cavitation. These requirements override the information given in Frame 3 if the static head required for the pump(s) exceeds that required for the boiler.

MINIMUM FLOW OF WATER - Refer to Table 4

The system design must provide for an adequate flow rate through the boiler at all times when the boiler is firing. The minimum flow rate should correspond to a temperature difference across the boiler flow and return of 35 °C (63 °F), assessed at catalogue rating.

WATER TREATMENT FOR HOT WATER AND HEATING BOILERS

There is a basic need to treat the water contained in all heating and indirect water systems, particularly open vented systems. It is assumed, incorrectly, that because boilers are operating in conjunction with what is apparently a closed circuit an open vented system will not, under normal circumstances, allow damage or loss of efficiency due to hardness salts and corrosion once the initial charge of water has been heated up a few times.

1mm of lime reduces the heat transfer from metal to water by 10%.

3 OPEN VENTED SYSTEMS - Minimum static head requirements

Particular reference should be made to BS. 6644: Section 2; Subsection 10 and Guidance note PM5 "Automatically controlled steam and hot water boilers" published by the Health and Safety Executive.

The information and guidance given below is not intended to override any requirements of either of the above publications or the requirements of the local authority, gas or water undertakings.

Other British Standards applicable are BS.5422 and BS.6700.

The information provided is based on the following assumptions:

1. An independent open vent/safety pipe connection is made to the redundant boiler flow tapping or is positioned immediately after the system flow pipe connection to the header, as shown.
2. An independent cold feed/expansion pipe connection is made to the redundant boiler return tapping. Cold feed/ expansion pipe connections made to the pumped system return will result in an increase in the static head requirement, caused by the additional resistance of the distributor tube. Surging may also increase.
3. The maximum flow rate through the boiler is based on a temperature difference of 11 °C at full boiler output and the circulating pump is positioned in the flow to the system.
4. The boiler is at the highest point of circulation in the system. Systems designed to rise above the boiler flow tappings will automatically require a minimum static head higher than that shown.
5. The position of the open vent/safety pipe above the expansion cistern water level is given as a guide only. The final position will depend upon the particular characteristics of the system. Pumping over of water into the expansion cistern must be avoided.

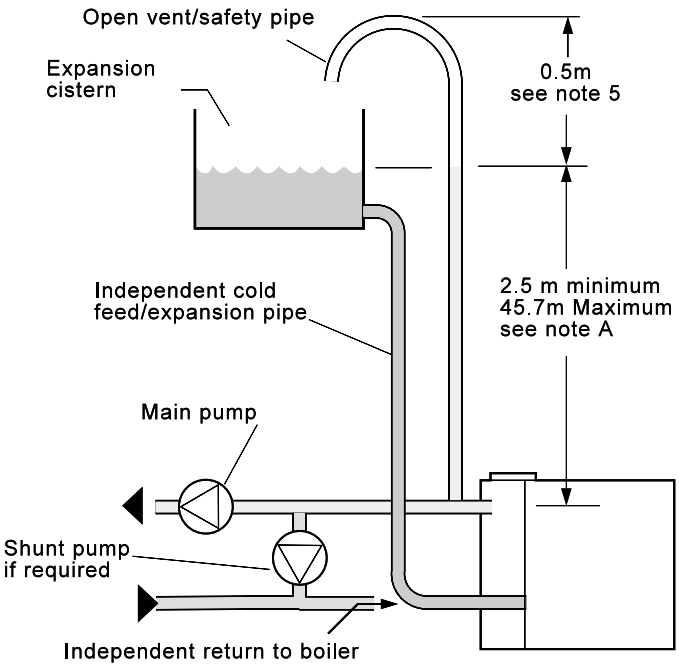

Note A. *This minimum height must be increased, if necessary, to comply with the minimum head required by the pump manufacturer in order to avoid cavitation.*

Note B. *This diagram does not show safety valves, water flow switches, etc., necessary for the safe operation of the system.*

In practice the deposition of these salts is liable to cause noises from the boiler body or even premature boiler failure. Corrosion and the formation of black iron oxide sludge will ultimately result in premature radiator failure.

Open vented systems are not completely sealed from the atmosphere if proper venting and expansion of system water is to be achieved. The same tank is used to fill the system with water and it is through the cold feed pipe that system water expands into the tank when the boiler passes heat into the system. Conversely, when the system cools, water previously expelled is drawn back from the tank into the system together with a quantity of dissolved oxygen.

Even if leakage from the heating and hot water system is eliminated there will be evaporation losses from the surface of the tank which, depending upon ambient temperature, may be high enough to evaporate a large portion of the system water capacity over a full heating season.

There will always be corrosion within a heating or hot water system to a greater or lesser degree, irrespective of water characteristics, unless the initial fill water from the mains is treated. Even the water in closed systems will promote corrosion unless treated. For the reason stated, **Caradon Plumbing Limited** strongly recommend that, when necessary, the system is thoroughly cleaned, prior to the use of stable inhibitor, which does not require continual topping up to combat the effects of hardness salts and corrosion on the heat exchangers of the boiler and associated systems.

Caradon Plumbing Limited advise contact directly with specialists on water treatment such as:

Fernox Manufacturing Co. Ltd.,
Tandem House,
Marlowe Way,
Croydon.
Surrey CRO 4XS
Tel 0870 5601 5000

or

Sentinel Division
Betz Dearborn Ltd.,
Widnes,
Cheshire,
WA8 8UD
Tel. 0151 424 5351.

INSTALLATION REQUIREMENTS

The appliance must be installed by a CORGI (❀) registered installer.

The installation of the boiler must be in accordance with the relevant requirements of the Gas Safety Regulations, current I.E.E. (BS.7671) Regulations, Model Water Bye-laws, local water authority bye-laws and it should also comply with any relevant requirements of the local gas region, local authority and the relevant British Standard Codes of practice and building regulations.

FOR SMALL PIPE INSTALLATIONS:

BS. 6891; Installation of low pressure pipework

FOR LARGE PIPE INSTALLATIONS:

British Gas Publications:

IM11: Flues for Commercial and Industrial Gas Fired Boilers and Air Heaters.

Gas Installations

IGE-UP-1: Purging Procedures of Non-domestic Gas Installations. Soundness Testing Procedures for Industrial and Commercial.

IGE-UP-2: Guidance notes on the Installation of Gas Pipework, Boosters and Compressors in Customer's Premises Equal to or Greater than 25mm (Non-domestic).

BS.6644: Installation of Gas Fired Hot Water Boilers 60kW to 2MW.

BS: 6880: 1-3: Water Supply.

CP342:2: Centralised Hot Water Supply.

Model Water Bye-laws

Manufacturers notes must not be taken, in any way, as overriding statutory obligations.

FOUNDATION

The boiler must stand on a non-combustible floor (i.e. concrete or brick) which must be flat, level and of a suitable load bearing capacity to support the weight of the boiler (when filled with water) and any ancillary equipment.

If the boiler is mounted on a plinth then the dimensions must exceed the plan area of the boiler by at least 75mm on each side.

4 SEALED (PRESSURISED) SYSTEMS

Working pressure 6.0 bar maximum.

Particular reference should be made to BS. 6644: Section 2; Subsection 11 and Guidance note PM5 "Automatically controlled steam and hot water boilers" published by the Health and Safety Executive.

The information and guidance given below is not intended to override any requirements of either of the above publications or the requirements of the local authority, gas or water undertakings.

In general, commercial closed pressurised systems are provided with either manual or automatic water make up.

On both instances it will be necessary to fit automatic controls intended to protect the boiler, circulating system and ancillary equipment by shutting down the boiler plant if a potentially hazardous situation should arise.

Examples of such situations are low water level and operating pressure or excessive pressure within the system. Depending on circumstances, controls will need to be either manual or automatic reset. In the event of shutdown both visual and audible alarms may be necessary.

Pressure vessels used must comply with BS. 4814 and must be sized on the basis of the total system volume and initial charge pressure.

Initial minimum charge pressure should not be less than 0.5 bar (7.2 psi) and must take account of static head and specification of the pressurising equipment. The maximum water temperatures permissible at the point of minimum pressure in the system are specified in Guidance Note PM5.

When make-up water is not provided automatically it will be necessary to fit controls which shut down the plant in the event of the maximum system pressure approaching to within 0.35 bar (5 psi) of safety valve setting.

Other British Standards applicable to commercial sealed systems are:-

BS. 6880: Part 2.
BS. 1212
BS. 6281: Part 1
BS. 6282: Part 1
BS. 6283: Part 4

VENTILATION

Safe, efficient and trouble-free operation of open flued gas boilers is vitally dependent on the provision of an adequate supply of fresh air to the room in which the appliance is installed. Ventilation by grilles communicating to the outside air is required; the minimum free area and the required positioning of these grilles must be in accordance with Tables 5 and 6.

Table 5

CXAP 40-60 boilers installed in a room or internal space

Boiler size	Air vent free area cm^2
40	209
50	252
60	313

This air vent shall be direct to outside air or to a room or internal space itself with an air vent to outside air of the same size.

Table 6 - CXAP 70-100 boilers

Total input rating of boilers	Position of air vents	Air vent areas (air direct from outside)
Up to 2 MW	HIGH LEVEL	270 cm^2 plus 2.25 cm^2 per kW in excess of 60 kW total rated input
Up to 2 MW	LOW LEVEL	540 cm^2 plus 4.5 cm^2 per kW in excess of 60 kW total rated input

Position ventilation grilles to avoid the risk of accidental obstruction by blockage or flooding.

Every installation must comply with the ventilation requirements of BS.6644 or BS.5440:2:2000

AIR SUPPLY BY MECHANICAL VENTILATION

The supply of air by mechanical means to a space housing the boiler should be by mechanical inlet with natural or mechanical extraction. Mechanical extract ventilation with natural inlet must NOT be used.

Where a mechanical inlet and a mechanical extract system is applied, the design ventilation flow rates should be as in Table 4 of BS.6644.

The requirements for air supply by mechanical ventilation are given in BS.6644.

Note. *For mechanical ventilation systems an automatic control should be provided to cause safety shutdown or lockout of the boiler(s) in the event of failure of air flow in either inlet or extract fans.*

IMPORTANT. The use of an extractor fan in the same room as the boiler (or in an adjacent, communicating room) can, in certain conditions, adversely affect the safe operation of the boiler. Where such a fan is already fitted (or if it is intended to fit an extractor fan after installation of the appliance) the advice of the Gas Region should be obtained.

Tests for spillage of products from the draught diverter when the extractor fan is running and all doors and windows are shut should be carried out after installation. If spillage is detected, the area of permanent ventilation must be increased.

CHIMNEY SYSTEM

To ensure the safe and satisfactory operation of the boiler the chimney system (which may be common or individual, in the case of twin or multiple boiler installations) must be capable of the complete evacuation of combustion products at all times. The effective height of the chimney terminal(s) above the boiler outlet(s) must ensure sufficient buoyancy to overcome the resistance of the bends, tees and runs of the flue pipe involved and shall terminate in a down draught free zone. The number of bends and lengths of horizontal flue pipe used should be kept to a minimum in order to reduce gas flow resistance.

Compliance with the recommendations made in BS.6644, British Gas publication IM 11 'Flues for Commercial and Industrial Gas Fired Boilers and Air Heaters' and the' Third Edition of the 1956 Clean Air Act Memorandum' should be strictly observed where applicable.

The chimney design should avoid the formation of excessive quantities of condensate. For this reason it is recommended that all chimneys are insulated and lined. In the case of brick or similar structures a stainless steel rigid or flexible flue liner (grade 304/316) may be used in conjunction with a 50 mm (minimum) thick layer of vemiculite or perlite granules between the liner and the inner skin of the chimney body. Liners should be sealed at both top and bottom.

As the **Concord CXAP range** of boilers is supplied complete with an integral draught diverter, a diverter MUST *NOT* be fitted within the chimney system.

Drainage points positioned at the bottom of all vertical chimney sections should be provided. Drain pipes should be no less than 25 mm I.D., manufactured from acid condensate resistant material such as stainless steel and be positioned so that pipe runs and discharge points are not subject to the effects of frost and that flue gases cannot leak into the boiler room.

Care should be taken to ensure the specification of the chimney is suitable for the application by reference to the manufacturers literature. **Caradon Plumbing Limited** can offer advice on the design of suitable chimney systems.

GAS SUPPLY

If there is any doubt regarding the capacity of the gas meter, the available gas pressure, the adequacy of existing service pipes or the size required for new service pipes then the advice of the gas region should be requested.

Installation pipework should be fitted and tested for gas soundness in accordance with BS. 6891;

IGE-UP-1 for small installations

IGE-UP-2 for large installations.

The local gas region must be consulted if it is necessary to employ a gas pressure booster.

ELECTRICAL SUPPLY

WARNING. This appliance must be efficiently earthed.

A 230 V - 50 Hz mains supply is required, fused at 5 amps.

Wiring external to the appliance MUST be in accordance with the I.E.E. (BS. 7671) Wiring Regulations and any local regulations which apply.

For details of connections refer to Frame 14.

5 CONCORD CXAP BOILER ASSEMBLY - Exploded view

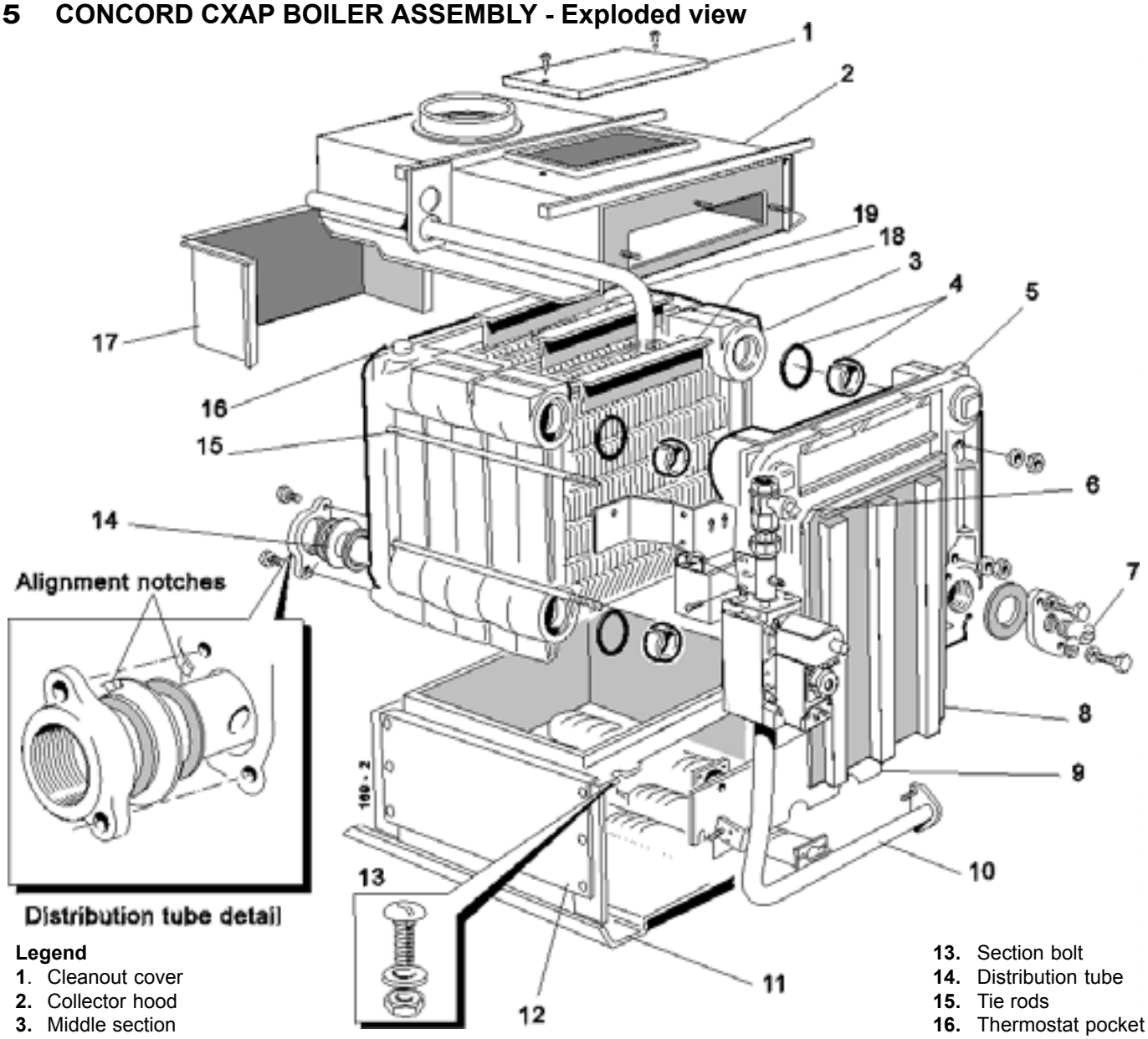

Legend

1. Cleanout cover
2. Collector hood
3. Middle section
4. Section alignment rings & 'O' rings
5. End section
6. Gas cock
7. Drain cock
8. NOx duct
9. Front plate
10. Burner manifold assy.
11. Base plate
12. Combustion chamber
13. Section bolt
14. Distribution tube
15. Tie rods
16. Thermostat pocket
17. Spillage skirt
18. Flueway baffles
19. Gas pipe

6 PACKAGING

Check that all these packages are complete and have been correctly received on site.

Factory assembled boilers are despatched from the works as fully packaged units comprising:

1. Assembled boiler body (with distributor tube) on a wooden pallet base enclosed in a wooden crate.
2. Carton containing the casing, fastenings and flue brush.
3. Carton containing the installation pack and instruction books.
4. Carton containing the control box.

CASING PACK contains:

- Front panel ..... 1 off
- Side panel ..... 2 off
- Top panel ..... 1 off
- Top support bracket ..... 2 off
- Flue brush ..... 1 off
- Casing hardware pack .... 1 off

INSTALLATION HARDWARE PACK contains:

- M10 washer ..... 4 off
- Split pin ..... 1 off
- Strain relief bush ..... 1 off
- M10 x 25 Hex. Hd. screw ..... 2 off
- M10 x 35 Hex. Hd. screw ..... 2 off
- Gasket EPDM Type EP600 ..... 3 off
- Plug 2" taper Sq.Hd. ..... 3 off
- Installation & Servicing Instructions .... 1 off
- User's Instructions ..... 1 off
- Flange RC 1" ..... 1 off
- 2" BSP Flange (distributor tube) ..... 1 off
- 2" Installation pipe (handling bars) ..... 2 off
- Thermostat pockets ..... 2 off

7 PACKAGING AND BOILER REMOVAL

1. Remove the casing carton and outer packaging frame.
2. Remove the casing pack support frame.
3. Remove the distributor tube pack, controls package and installation pack.
4. Remove the 2" BSP steel handling bars from the installation pack.
5. Remove the 4 base bolts holding assembly to the packaging base.
6. Remove the wood screws securing the front cross member on the packaging base.
7. Remove the gas cock by unscrewing the union and screw in the handling bars into the 2 front tappings. *Protect the exposed inlet gas union from ingress of dirt.*
8. Knock out the front spacing blocks from the packaging base, ensuring that the boiler assembly is supported, using 2" BSP handling bars.
9. Using the handling bars, manoeuvre the boiler forwards on the packaging base and slide it over collapsing base on to the floor.

   Note. *Before manoeuvring the boiler into its final position see Frame* 8

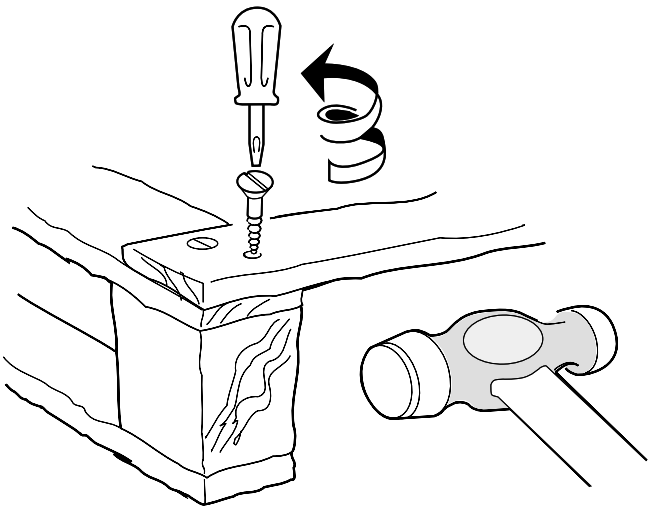

8 BOILER ASSEMBLY

1. Fit the distributor tube (supplied with the boiler) into one of the return connection. That is one of the rear lower ports - refer to Frame 5.

   Fit the flange, using the M10 x 35mm screws and washers provided.

   Ensure that the notch in the tube flange sits correctly into the groove on the section and that the 2 sealing gaskets are correctly assembled on the tube.
2. Fit the 1" tapped flange to the other lower rear connection, using the gasket and M10 x 25mm screws and washers provided.
3. Temporarily screw the 2 handling bars (2" pipe) into the top tappings and manoeuvre the boiler into position.
4. Complete the system connections, using suitable jointing compound, as follows:

   a. The flow connection may be made to either of the rear top tappings (either at the same side as the return or opposite the return).
   To avoid air locks, any reduction in pipe size must be made in the vertical plane or achieved by using eccentric bushes.

   b. The 1" tapping in the redundant return flange may be used for the cold feed on an open system or connection of a pressure vessel if on a sealed system.
   If not required for this purpose it should be plugged.

   c. Fit the 2 thermostat pockets. Refer to Frame 9.

   Note. *Frame 9 shows the relationship between the overheat thermostat and the flow tapping.*

   d. Complete the water connections by plugging the 2 front top tappings with the 2" BSP plugs provided.

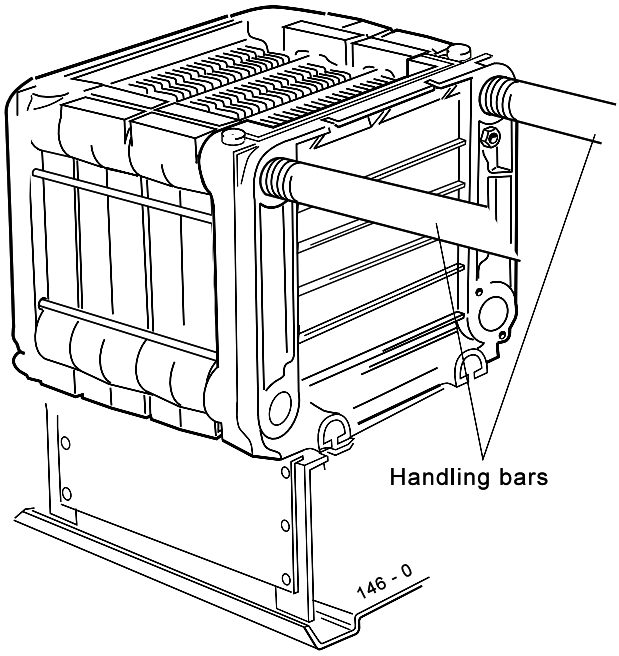

9 SYSTEM CONNECTIONS

One flow and return connection should be made to the rear of the boiler - either on one side or opposite sides.

The distributor tube and gaskets, supplied with the boiler, must be connected into the pumped return connection. Refer to Frame 8.

Two thermostat pockets are supplied in the installation pack. These must be fitted in the 2 top 1/2" BSP tappings at either side of the rear of the heat exchanger.

Position the overheat thermostat phial into the thermostat pocket at the opposite side to the flow pipe. The illustrations below show the rear of the boiler with the flow and relative overheat thermostat positions.

Ensure that the overheat thermostat phial and control sensor are correctly secured in the pockets. Refer to Frame 13.

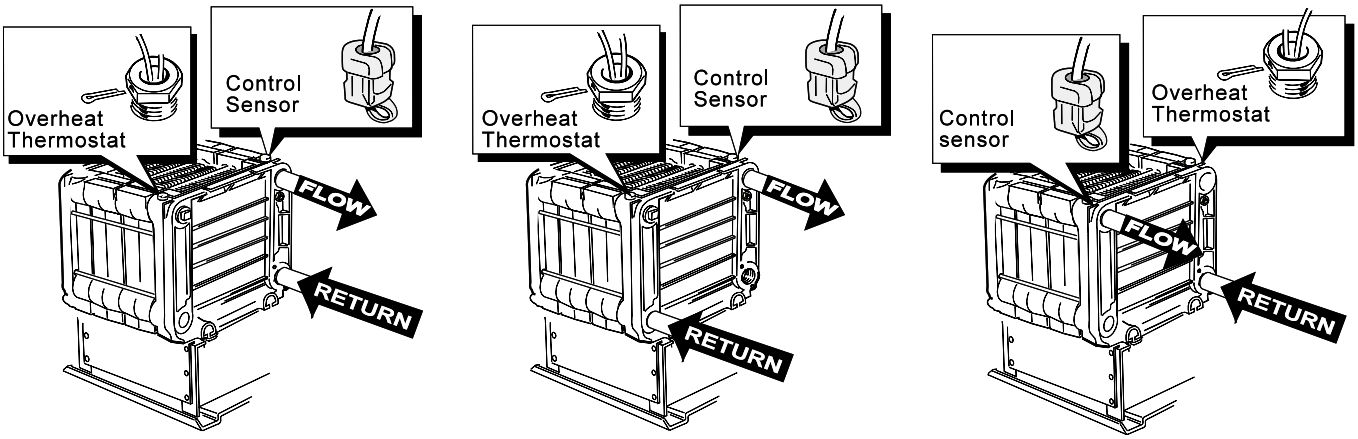

10 FLUE CONNECTION

1. Complete the flue connection.
2. The boiler is designed to accept flues to BS. 835 and should be sealed with an approved boiler putty.

11 GAS CONNECTION

1. Connect the gas supply to the gas inlet pipe at the rear LH side of the boiler.
2. Table 2 gives details of the inlet connection size and the minimum working pressures.

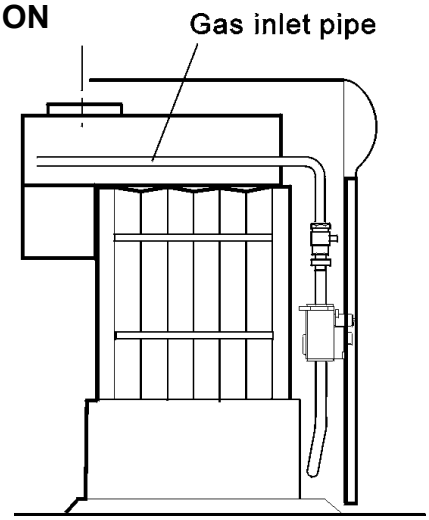

12 CASING ASSEMBLY

1. Unpack the control box from its carton and release the temperature sensing probe strapped to the back of the box.

   The boiler casing should now be fitted.

   A casing hardware pack contains all the screws required for assembly.
2. Slide the bottom of the side panels on to the location buttons on the base tray.
3. Screw the side panel to support angles. Repeat for the other side.

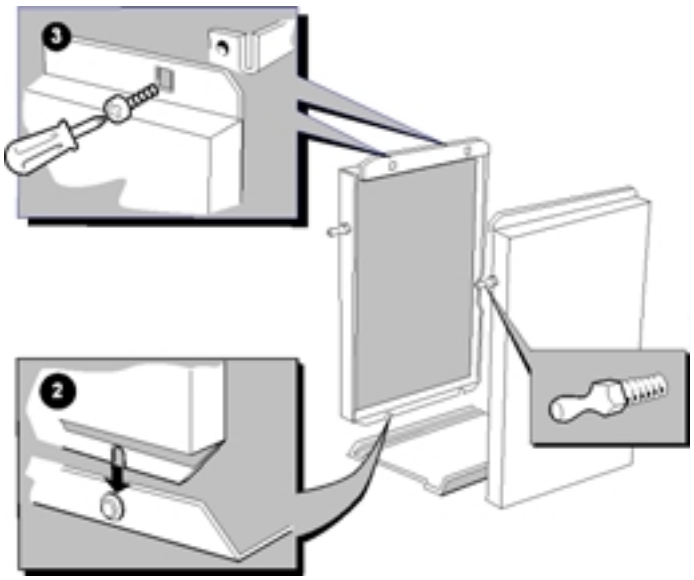

13 CASING ASSEMBLY (continued)

4. Fit 3 clips to the top of each side panel.
5. Fit the spire clips to the side casing panels.
6. Hook on the control box to the side panels. Screw in self-tapping screws at the bottom of the control box to fix it to the side panels.

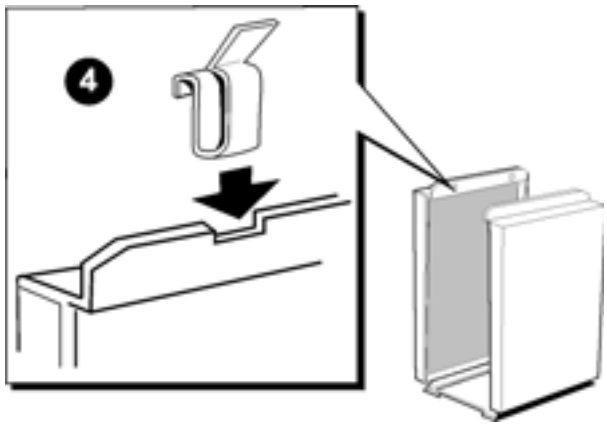

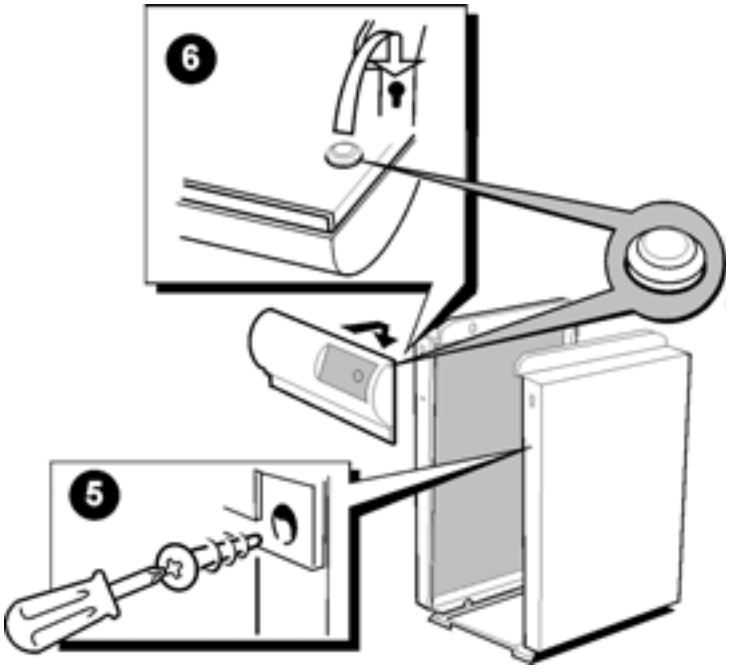

7. Route the overheat thermostat capillary through the cable clips as shown. Ensure the phial is correctly seated in the correct pocket opposite side to the flow connection. Refer to Frame 9. Secure with the split pin provided.
8. Route the temperature sensing probe through the cable clips provided and into the thermostat pocket adjacent to the flow connection.

   Fit the plastic Heyco bush over the sensor lead at the line shown and insert it into the thermostat pocket. Ensure that the Heyco bush is correctly located.

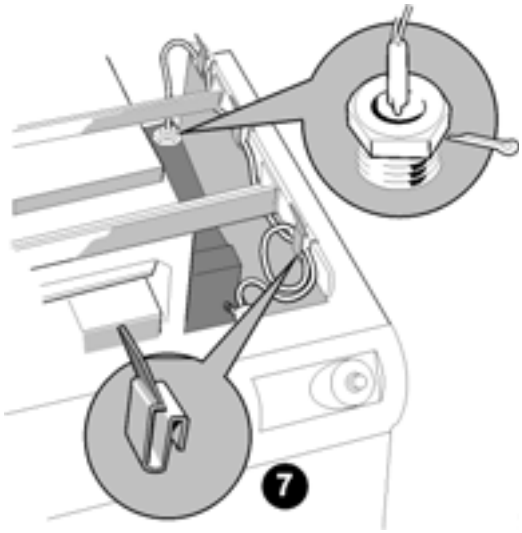

9. Fit earth leads as shown.

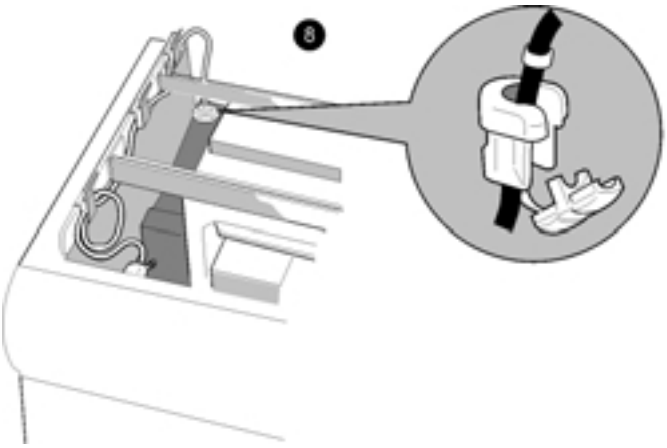

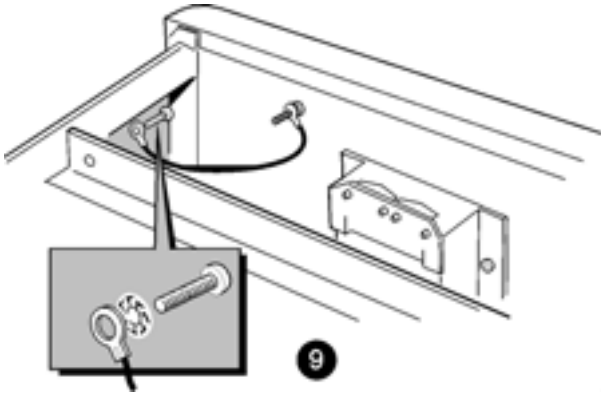

14 ELECTRICAL CONNECTIONS

Connection must be made in a way that allows complete isolation of the electrical supply - such as a double pole switch, having a 3mm (1/8") contact separation in both poles, or a plug and socket serving only the boiler and system controls. The means of isolation must be accessible to the user after installation.

This should serve only the boiler, together with its controls and pumps. The unswitched live supply, which the boiler requires to allow the pump overrun facility to operate should be controlled by the above switched/fused supply, but should connect from there directly to the boiler and not via any automatic time or temperature controls.

The switched live supply should be subject to control by time and temperature controls in the usual way.

The controls incorporate a pump overrun facility, which is necessary to dissipate residual heat on plant shutdown. It is essential, therefore, that the main pump (and shunt pump if fitted) is wired to the pump terminals marked L2 , N and Earth on the plug-in terminal strip on the top box at the rear of the control box.

The mains supply to the boiler must be wired to the boiler terminals L1, N and Earth on the plug-in terminal strip. This live connection must be unswitched, that is a supply not interrupted by any automatic temperature or time control, to enable the pump overrun (and the frost protection facility) to operate.

Failure to operate this procedure will result in nuisance overheat thermostat operation.

If the downdraught flue thermostat is to be fitted then the link (marked TTB) should be removed from the plug in connector.

The internal wiring of the boiler control box is shown in Frame 16.

Wiring should be in four core PVC insulated cable, not less than 0.75mm^2 (24/0.2mm). All fuses must be ASTA approved to BS. 1362.

The length of the conductors between the cord anchorage and the terminals must be such that the current carrying conductors become taut before the earthing conductor, if the cable or cord slips out of the cord anchorage.

The boiler can be controlled either by volt-free external contacts connected between terminals X1 and X2 or by a switched live supply brought to X2 (after removal of the factory- fitted link between X1 and X2), accompanied in each case by a permanent live supply to terminal L1.

If a separate frost thermostat is fitted it must be wired across the time switch contacts and if frost is likely the system should be turned off using the time switch settings - all other controls, including the boiler thermostat knob, should be in the normal running position.

The earth connections MUST NEVER be omitted.

Wire the earths as shown in Frames 13 and 16.

All wiring between entry at the rear of the boiler and the connection box must be secured neatly under the cable clips provided.
Wiring must never be allowed to come into contact with the hot boiler body.

Do not wire these connections in conduit up to the boiler as this will make it impossible to remove the control box for servicing or maintenance.

If fitted, a flow switch should be wired between F1 and F2 on the terminal plug in connector on the bottom box at the rear of the control box.

15 CONTROLS ASSEMBLY

Remove the 2 screws from the box at the bottom of the control box back panel and push in the terminal plug-in connector containing the gas valve wiring harnesses; secure with the 2 screws.

Fit the earth terminals to the earth post at the left hand side of the control box back panel.

Undo the 2 screws securing the control box front panel and carefully lower it. Undo the stress relief clamp situated on the LH side of the control box above the grommeted hole.

Free the sleeving containing the spark electrode lead and the flame detector lead and pass the terminals and sleeving through the grommetted hole; connect them to the appropriate terminals of the S4561B1054 PCB; refer to wiring diagram Frame 16.

Refit the stress relief clamp ensuring that the sleeving passes through the clamp before tightening.

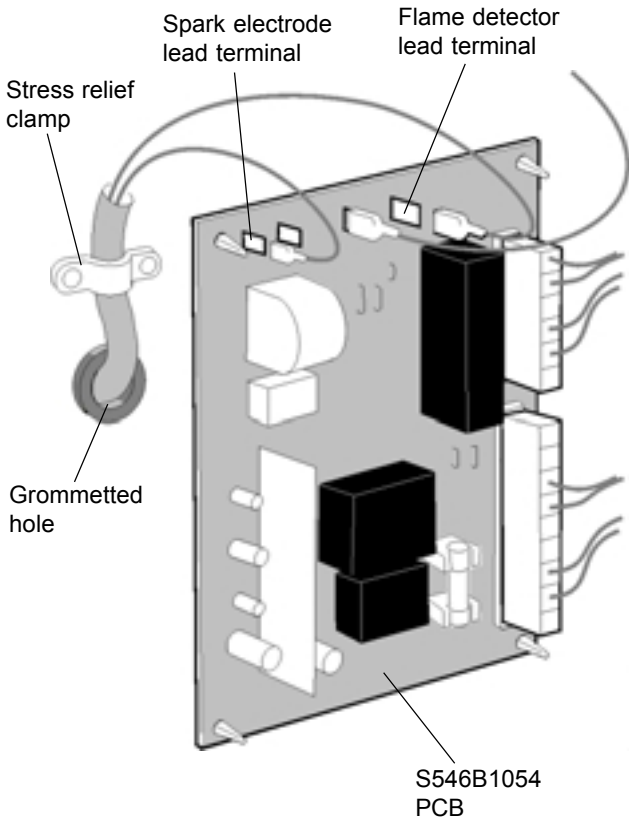

15 INTERNAL WIRING

LEGEND

b	blue	**br**	brown	**y**	yellow	**y/g**	yellow/green	**v**	violet
bk	black	**r**	red	**w**	white	**or**	orange	**pk**	pink

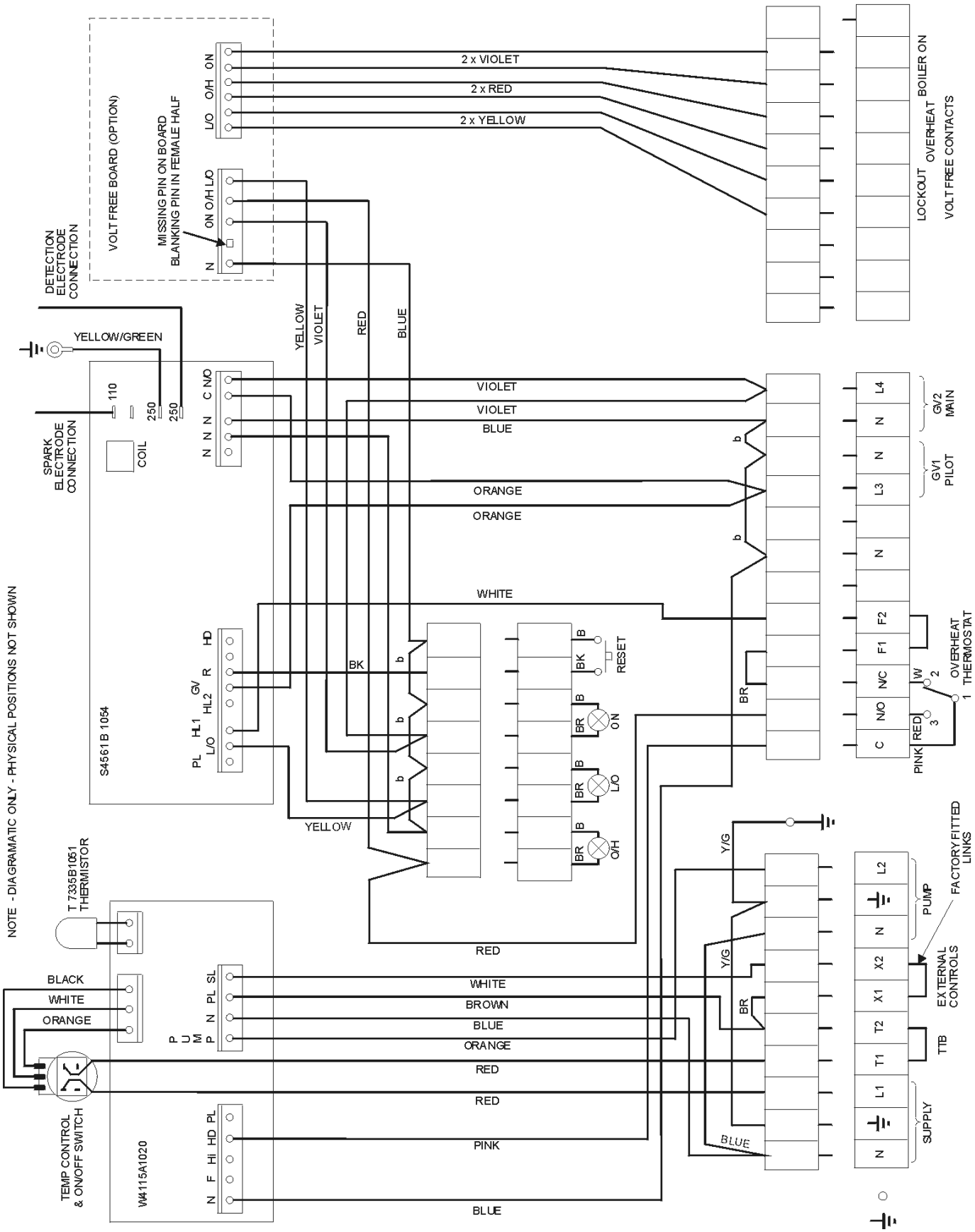

16 ZONES WITH BI-DIRECTIONAL MOTORISED VALVES

IMPORTANT

Terminal L2 may control the appropriate pump(s) directly, provided that the total running or starting current does not exceed 6A (resistive or inductive): if this rating would be exceeded then appropriate switchgear must be used to control the pumps indirectly.

Three zones are illustrated but the principles may be extended as required, provided the above conditions are met. Each relay will then require as many contacts as there are zones.

Overrun

Since any zone may be the load during overrun, all zones MUST individually be able to satisfy the conditions in the foregoing paragraph. If not all zones can do this then consider other means of control detailed on other sheets.

Normal operation

When any thermostat is satisfied while others are calling for heat, power is available via relay contacts to close the valve for that zone. When all thermostats are satisfied (also when the clock period ends) all relays will be off, so the zone valves which were open will remain open for the pump overrun. At the start of the next call for heat (or the next clock period) valves on zones not calling for heat will motor shut.

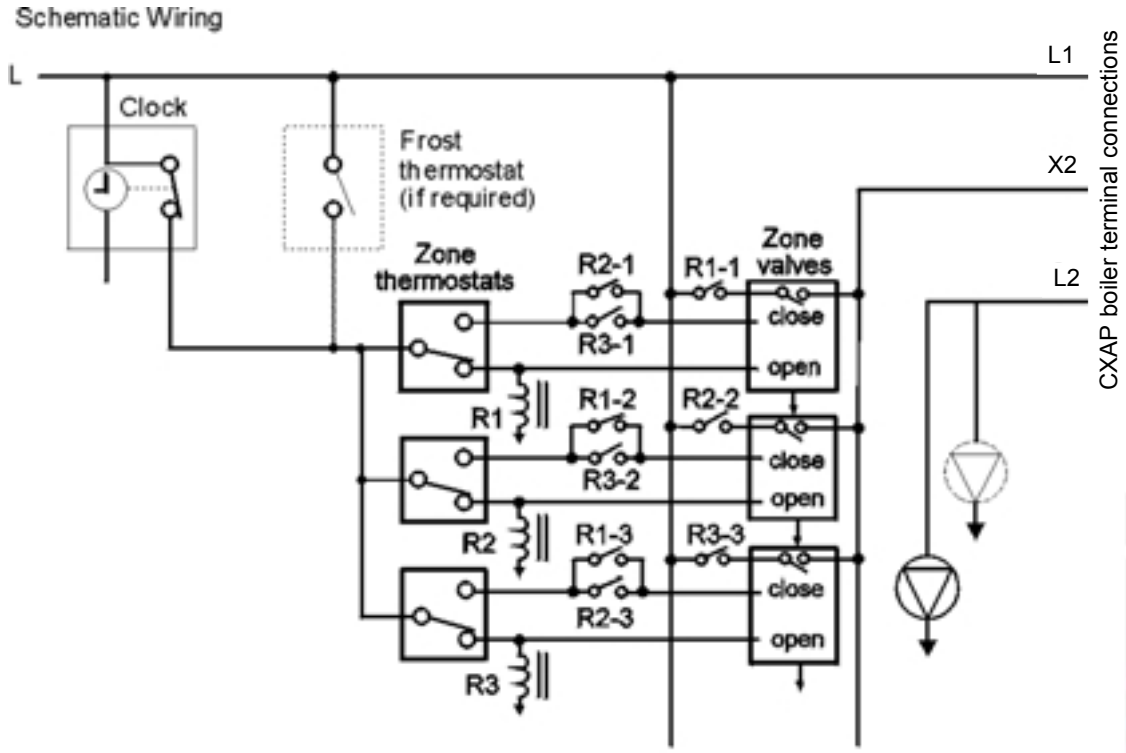

NB. Contacts shown at room temperature with power off

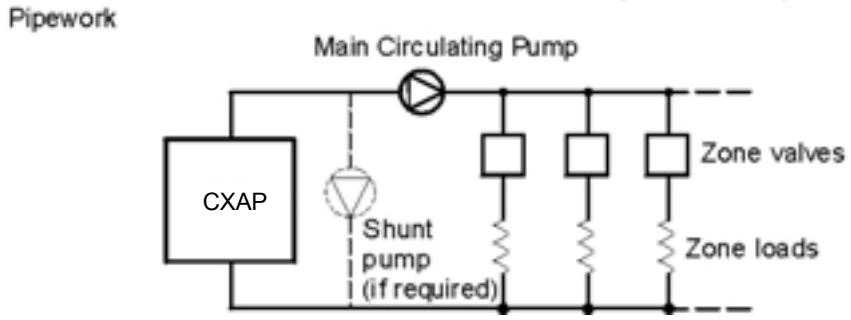

17 ZONES WITH INDIVIDUALLY PUMPED ZONES (3 zones shown)

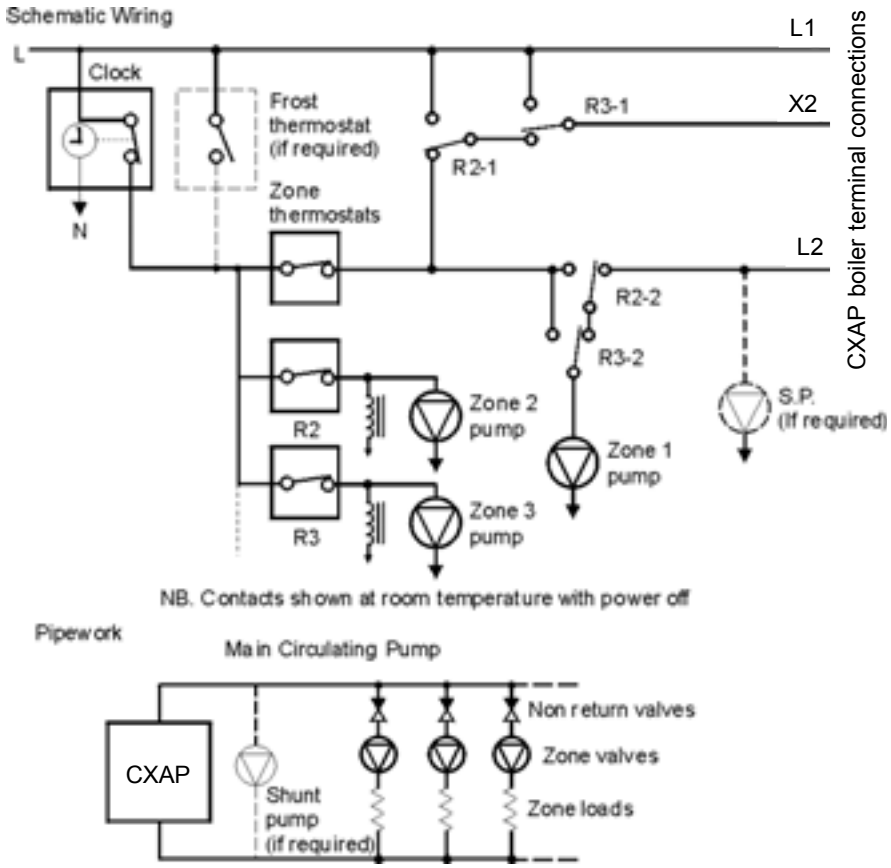

IMPORTANT

Terminal L2 may control the appropriate pump(s) directly, provided that the total running or starting current does not exceed 6A (resistive or inductive): if this rating would be exceeded then appropriate switchgear must be used to control the pumps indirectly.

Three zones are illustrated but the principles may be extended as required, provided the above conditions are met. For each zone (except Zone 1) a relay with 2 C/O contacts is required.

Overrun

During overrun periods, Zone 1 pump performs the overrun facility; this zone, therefore, must satisfy the conditions in the foregoing paragraphs and Graph 1.

Normal operation

During a call for heat on Zone 1 only, Zone 1 thermostat energises the boiler, which in turn energises Zone 1 pump from terminal L2.

During a call for heat on other zones, the appropriate relay directs power to L1 to energise the boiler, at the same time ensuring that Zone 1 pump is controlled by Zone 1 thermostat.

18 ZONES WITH SPRING-RETURN MOTORISED VALVES

IMPORTANT

Terminal L2 may control the appropriate pump(s) directly, provided that the total running or starting current does not exceed 6A (resistive or inductive): if this rating would be exceeded, then appropriate switchgear must be used to control the pumps indirectly.

Three zones are illustrated but the principles may be extended as required, provided the above conditions are met. Only one relay is required, irrespective of the number of zones.

Overrun

During overrun and dormant periods, Zone Valve 1 is held open. This zone, therefore, must satisfy the conditions in the foregoing paragraphs and Graph 1.

Normal operation

During a call for heat on Zone 1 only, the boiler energises via Zone 1 thermostat and the normally closed contacts of the relay.

During a call for heat on other zone(s), the relay will be energised by the auxiliary switch on the zone valves. This provides power to energise the boiler. If, in addition, Zone 1 now calls for heat, its thermostat will open Zone 1 valve via the normally open contacts of the relay.

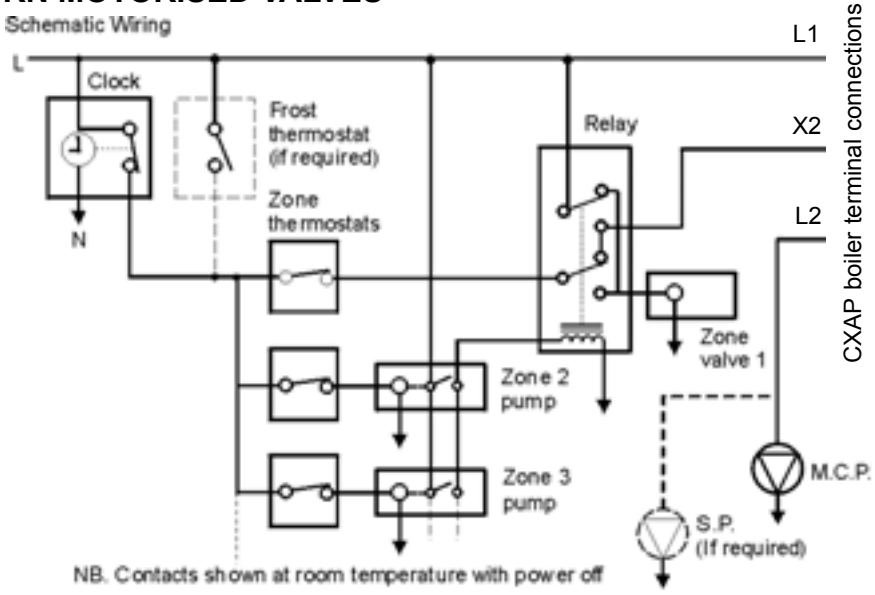

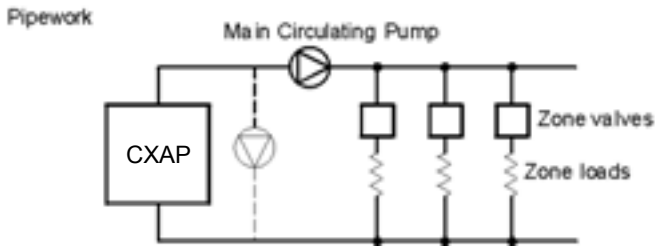

When the clock period ends, Zone valve 1 will (stay) open via normally closed relay contacts to achieve pump overrun.

19 COMMISSIONING AND TESTING

GENERAL

Check that all drain cocks are closed, that any stop valves fitted to the flow and return pipes are open and that the system has been filled and properly vented.

PURGING

Check that the electricity supply is switched OFF.

Remove the casing lower front panel.

Extinguish all naked lights and open all doors and windows. DO NOT SMOKE. Check that the gas supply is turned ON at the meter and open the main gas inlet cock. Loosen the union and allow air to be purged from the gas line until gas is smelled. Refer to BS 6891 or IGE-UP-1 for further details. Retighten the union.

TESTING FOR GAS SOUNDNESS

Close the gas supply cock at the meter.

Remove the screw in the inlet pressure test point (Frames 20/21) and connect a gas pressure gauge to the test point. Take particular care to ensure a gastight connection. Open the gas supply cock at the meter and the appliance gas cock; record the static pressure. Next, close the gas supply cock at the meter. Wait for 1 minute for temperature stabilisation then observe the pressure gauge over a period of 2 minutes.

Any leaks must be cured.

Replace all pressure test point screws.

20 INITIAL LIGHTING

1. Check that the boiler thermostat knob on the control box is 'OFF'.
2. Ensure that the main gas inlet cock is open (groove in the square head in line with the pipe).
3. Press in the overheat reset button.
4. Switch on the electrical supply to the boiler.
5. Turn the boiler thermostat knob on the control panel to number 6.
6. If the boiler does not light at the end of its ignition period, the lockout light will be illuminated. Press in and release the lockout reset button on the control box. The controls will reset and after a period of time will attempt to relight.
7. Once the pilot has lit, the controls will open the main gas valves and the main burners will light. The burner on light will be illuminated.
8. When the boiler has lit, check all connections for tightness using leak detection fluid.
9. Set the boiler thermostat knob to the required setting.
10. Turn off the electrical supply to the boiler at the mains.

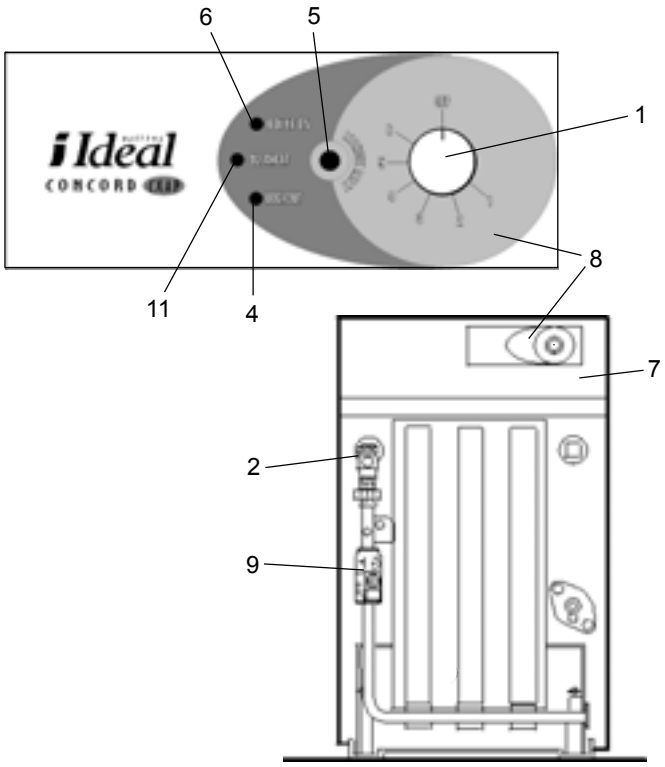

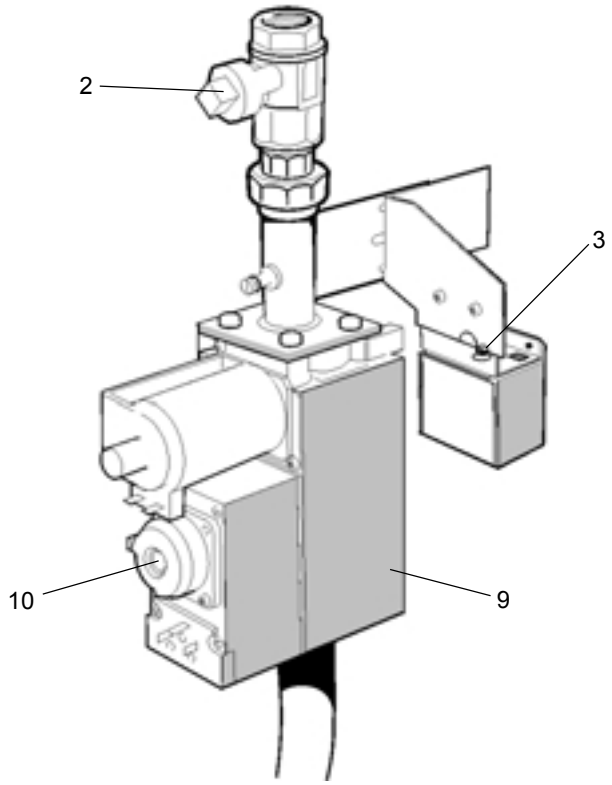

LEGEND

1. Thermostat knob
2. Main gas inlet cock
3. Overheat thermostat reset button
4. Lockout light
5. Lockout reset button
6. Burner on light
7. Control box
8. Control panel
9. Main gas control valve
10. Manifold pressure setting adjuster
11. Overheat light

21 MANIFOLD GAS PRESSURE

The manifold setting pressure must now be checked against the values given in Table 2.

No adjustment should be necessary if a pressure regulator complying with the requirements of BS.3016, providing an outlet pressure of 37.0 mbar (14.9 in. w.g.), is used.

Burner pressure adjustment can only be achieved externally to the appliance. Do not attempt to interfere with the gas valve governor setting, which is factory sealed.

Check for any gas leaks around the test point with a suitable leak detection fluid.

22 SPILLAGE CHECK

Check there is no spillage of combustion products from the boiler draught diverter by carrying out a spillage test, as detailed in BS. 5440:1.

23 TESTING

Check that the main burner responds correctly to manual on/off operations of any controls fitted in the gas control circuit. Check, in the following manner, the operation of the flame failure safety device:

1. Extinguish the main burner and pilot burner by turning off the main gas inlet cock.
2. The controls will go to lockout almost immediately and the lockout light on the control panel will light.
3. Turn the gas cock again, and press in and release the lockout reset button on the control box. After a period of time the controls reset the boiler and it will relight.

24 ADJUSTMENT OF WATER FLOW RATE THROUGH THE BOILER

When commissioning the heating/domestic hot water system the shunt pump must be adjusted to give the minimum flow rate given in Table 4, when that part of the system intended to be used for dissipation of residual heat only is in operation.

25 HANDING OVER

ROUTINE OPERATION

Full instructions covering routine lighting and operation of the boiler are given on the Lighting and Operation Instruction Label located on the inside of the casing door.

Draw the attention of the boiler owner or his representative to the Lighting and Operating Instruction Label on the inside of the casing door. Give a practical demonstration of the lighting and shutting down of the boiler.

Describe the function of the boiler and system controls and show how they are adjusted and used.

Describe the function of the downdraught thermostat if fitted.

Hand over these and the User's Instructions to the customer and request him/her to keep them in a safe place for ready reference.

IMPORTANT. Point out to the owner that the boiler must have regular maintenance and cleaning, at least annually, in order to ensure reliable and efficient operation. Regular attention will also prolong the life of the boiler and should preferably be performed at the end of the heating season.

Recommend that a contract for this work should be made with the regional gas authority or a CORGI registered heating installer.

26 SERVICING

Caradon Plumbing Limited does not accept any liability resulting from the use of unauthorised parts or the repair and servicing of appliances not carried out in accordance with the Company's recommendations and specifications.

A comprehensive service should be carried out at least once a year. The User is advised to make a contract with the local Gas Region or a CORGI registered heating installer.

WARNING. ALWAYS turn *OFF* the gas supply at the gas cock and switch *OFF* and disconnect the electricity supply to the appliance BEFORE SERVICING OR REPLACING ANY COMPONENTS.

CLEANING THE BOILER. Refer to Frame 5

Pull and lift off the lower front panel and top panel from the boiler casing.

Unscrew the extended nuts at the top of the NOx duct behind the control box and lift the NOx duct clear of the burners as illustrated.

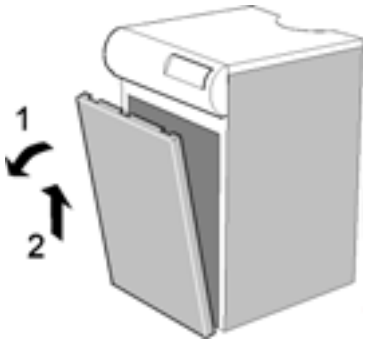

Undo the 4 wing nuts securing the burner front plate. Pull the front plate forwards, at the top, and lift it out - taking care not to damage the insulation.

The centre and RH burners can be lifted out after they have been pushed back to clear the injector.

To remove LH burner the pilot gas pipe connection at the gas valve must be removed. The LH burner may now be removed by pushing it back to clear the injector and lifting it out. To remove it away from the boiler, the flame detector lead and spark lead must be disconnected in the control box.

Remove the 2 screws securing the control box door, lift it and carefully drop it down. Pull off the flame detector lead and the spark electrode lead connections from the S4561B1054 PCB (the LH board). Undo the strain relief clamp and feed the sleeved leads out of the box. The burner can now be fully removed from the boiler.

Undo the screws securing the cleanout cover and lift it off to give access to the flue ways. Lift out the flue baffles.

Remove all loose deposits from the heat exchanger, especially from between the fins, using the brush provided, and remove all debris from the combustion chamber floor.

Examine the burner assembly. Clean the burner bars by brushing them down with a stiff bristle (not wire) brush. Check each bar carefully to ensure that all flame ports are clear, that there are no cracks and that all surfaces are free from accumulated deposits.

If available, an industrial vacuum cleaner may be useful to assist in this work. When cleaning the burner bars, take care to avoid damage from rough handling to the pilot pipe, electrodes and leads.

Inspect the pilot burner, injector, ignition electrode, and flame detector electrode. Ensure that they are clean and in good condition. In particular, check that:

1. The pilot burner is firmly secured.
2. The pilot shield is clean and correctly positioned.
3. The ignition electrode and lead are clean, undamaged, secure and correctly dimensioned. Refer to plan view below.
4. The flame detector electrode and lead is clean, undamaged, secure and correctly dimensioned. Refer to plan view below.
5. The pilot burner head is clean and undamaged.

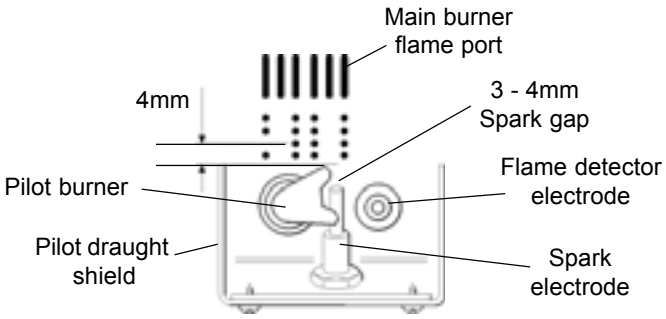

Plan view showing the pilot and electrode positions

Refit the LH burner, ensuring that the flame detector lead is properly connected. Reconnect both electrode leads at the S456A1054 PCB in the control box. Ensure the sleeving passes through the strain relief clamp before refastening it.

Refit the centre and RH burners. Ensure that care is taken not to damage the combustion chamber insulation and that the burner front plate fits beyond the burner retaining returns when it is refitted.

Refit the flue baffles, clean out cover, NOx ducts, control box door, casing top and front panels.

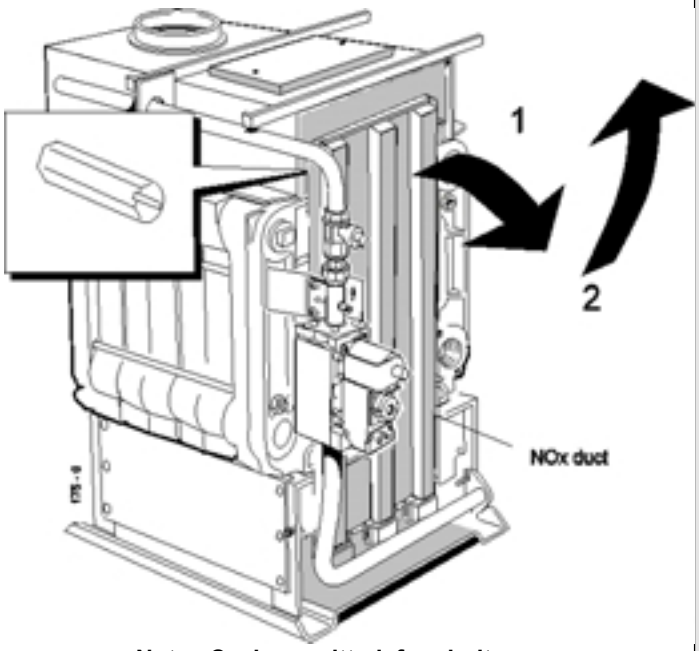

Note. Casing omitted for clarity

27 SERVICING - continued

TESTING AFTER SERVICING

After re-assembly, restore the electricity and gas supplies. Light the boiler (refer to the Lighting and Operating Instruction Label on the inside of the casing front panel) and check the gas connections for tightness, as detailed under 'Testing for Gas Soundness' - Frame 19.

Check gas pressures as instructed in Frame 21 'Manifold Gas Pressure' and 'Testing'. Adjust any time and temperature controls to User's requirements and remember to reset any time control, which may have been switched off, to the correct time of day.

Refit the lower front panel.

28 REPLACEMENT OF COMPONENTS - Refer to Frames 5, 23, 34 and 35.

GENERAL

WARNING. *Always* turn *OFF* the gas supply at the gas inlet cock and switch *OFF* and *DISCONNECT* the electricity supply *BEFORE WORKING* on the appliance.

To facilitate the replacement of components, remove and replace the lower front panel, NOx duct and the burner front plate as necessary - described under 'Servicing'.

29 PILOT BURNER ASSEMBLY

1. Remove the LH burner as previously described in Frame 27
2. Remove the 2 screws securing the control box front panel, lift it and carefully lower it.
3. Remove the flame detector lead and the spark lead connections from the S4561B1054 PCB in the control box. Undo the strain relief clamp and pass the sleeved wires through the grommeted hole in the back panel.
4. Remove the spark electrode by undoing the back nut. Pull off the flame detector lead connection and unscrew the electrode.
5. Undo the pilot pipe connection and undo the 2 screws retaining the pilot burner and remove it.
6. Fit the new pilot burner, ensuring that it faces towards the front of the burner and that the pilot injector is in position before connecting the pilot pipe.
7. Reassemble in reverse order, ensuring that the spark electrode lead passes through the sleeving and that the sleeving passes through the strain relief clamp in the control box before retightening.

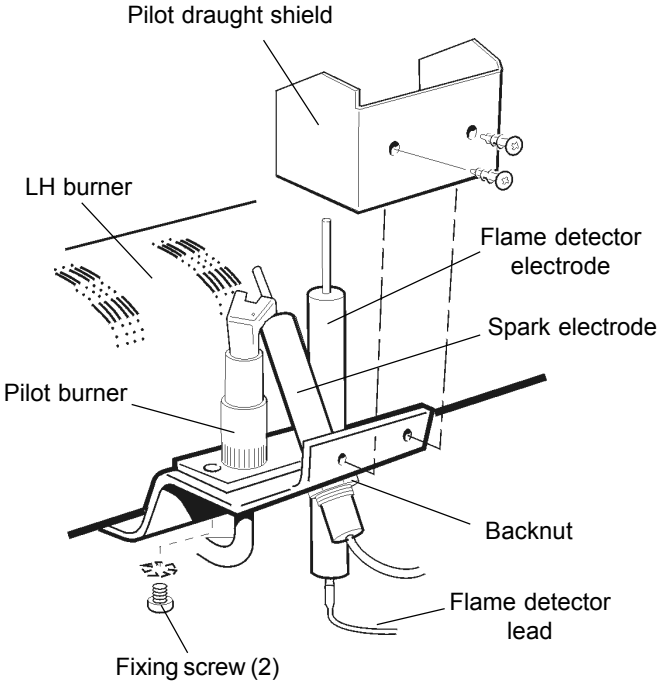

30 SPARK ELECTRODE AND LEAD

1. Remove the LH burner as previously described in Frame 27
2. Remove the 2 screws securing the control box front panel, lift it and carefully lower it.
3. Remove the spark lead and flame detector lead connection from PCB S4561B1054 in the control box. Undo the strain relief clamp and pass the sleeved wires through the grommeted hole in the back panel.
4. Remove the spark electrode by undoing the back nut.
5. Fit the new electrode and reassemble in reverse order, ensuring that the spark electrode lead passes through the sleeving and that the sleeving passes through the strain relief clamp in the control box before retightening. Ensure that the push-on connections are as follows (from left to right): spark electrode, blank, earth, flame detector.

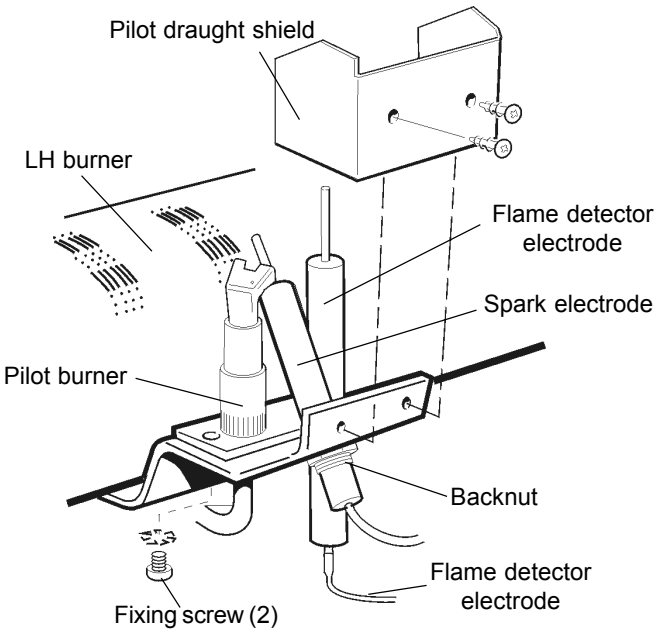

31 FLAME DETECTOR AND LEAD

1. Remove the LH burner as previously described in Frame 27
2. Pull off the lead at the electrode and unscrew the flame detector electrode.
3. Fit the new electrode and reassemble in reverse order.
4. To change the lead, remove the 2 screws securing the control box front panel, lift it and carefully lower it. Remove the flame detector lead and spark lead connection from PCB S4561B1054 in the control box, undo the strain relief clamp and pass the sleeved wires through the grommeted hole in the back panel.
5. Pull the lead through the sleeving. The new lead must be passed through the sleeving small fitting first.
6. Reassemble in reverse order ensuring that the sleeving passes through the strain relief clamp before tightening. Ensure that the push-on connections are as follows (from left to right): spark electrode, blank, earth, flame detector.

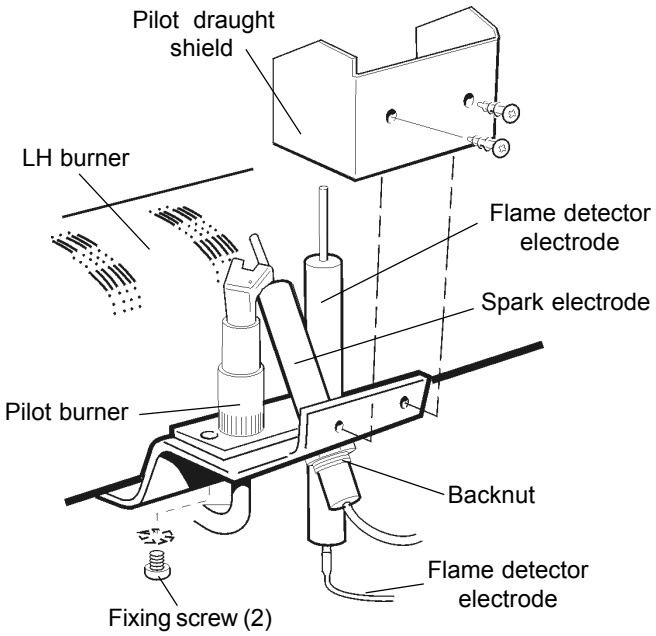

32 GAS CONTROL VALVE

1. Undo the pilot gas pipe connection at the gas control valve (if required).
2. Undo the screws securing the electrical plugs on the gas valve and lift them off.
4. Check that the gas inlet cock is OFF, unscrew the 4 screws from the inlet flange, and the 4 screws from the outlet flange and remove the valve. (CXAP 90/100, loosen the other 4 screws on the inlet flange securing the other gas valve).
5. Replace the gas control valve and re-assemble in reverse order, ensuring that the arrow indicating the direction of flow is in the correct position.
6. Ensure that a new 'O' ring seal is correctly placed in each flange connection.
7. Test for gas soundness.

33 MAIN BURNERS

1. Remove the NOx duct and burner front plate, as previously described in Frame 27.
2. Both RH and centre burners can be removed by sliding each one back to clear the injector, and then lifting out.
3. To exchange the LH burner remove it from the boiler as previously described in Frame 27. Remove pilot burner as described in Frame 29.
4. Fit the new LH burner and the centre and RH burners.

   Note. *Ensure that the pilot burner is correctly fitted, i.e. facing the front, and that the pilot injector has not been omitted.*

7. Reconnect the pilot gas pipe connection to the gas valve.

IMPORTANT. Care must be taken to prevent damage to the combustion chamber insulation when replacing burners.

34 BURNER AND CONTROLS ASSEMBLY - Exploded View CXAP 40 - 80

LEGEND

1. Main gas inlet cock
2. Gas inlet union
3. Gas control valve
4. 'O' ring seal
5. Gas inlet manifold
6. Main injector, 3 off
7. RH burner
8. Centre burner
9. LH burner
10. Overheat thermostat cover
11. Overheat thermostat
12. Mounting brackets
13. Pilot draught shield
14. Flame detector electrode
15. Spark electrode
16. Pilot gas pipe
17. Pilot burner

PTP pressure test point

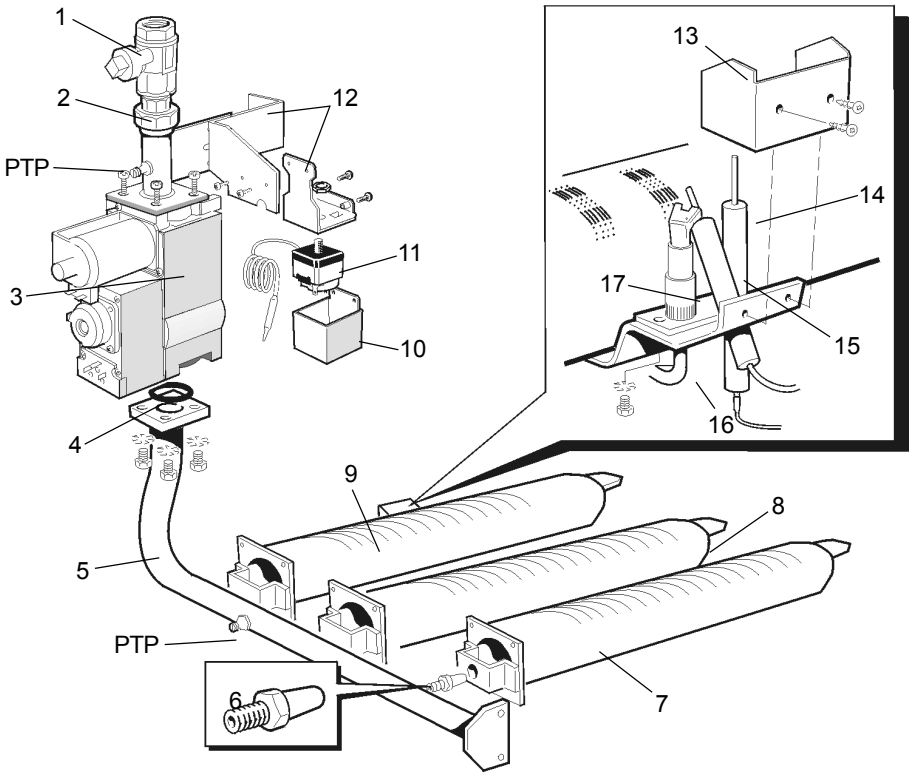

35 BURNER AND CONTROLS ASSEMBLY - Exploded View CXAP 90 - 100

LEGEND

1. Main gas inlet cock
2. Gas inlet union
3. Gas control valves
4. 'O' ring seal
5. Gas inlet manifold
6. Main injector, 3 off
7. RH burner
8. Centre burner
9. LH burner
10. Overheat thermostat cover
11. Overheat thermostat
12. Mounting brackets
13. Pilot draught shield
14. Flame detector electrode
15. Spark electrode
16. Pilot gas pipe
17. Pilot burner

PTP pressure test point

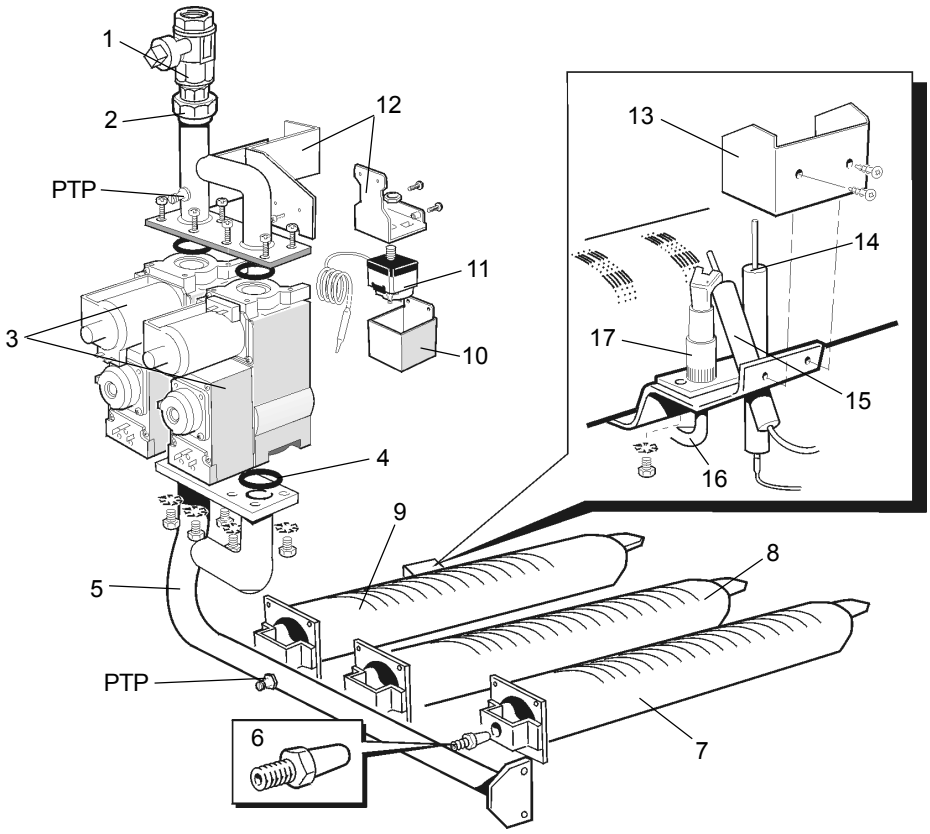

36 OVERHEAT THERMOSTAT

1. Remove the split pin from the overheat thermostat pocket and remove the phial.
2. Undo the two M3 screws and remove the thermostat assembly from its fixing bracket.
3. Undo the backnut and two M3 screws to release the top bracket.
4. Remove the wires and reconnect them to the new thermostat body as follows:
   1. pink
   2. white
   3. red

   Reconnect the earth connection.
5. Reassemble in reverse order, ensuring that the thermostat connections are facing the front before fitting the top bracket, and that the capillary goes through the slot in the top panel.

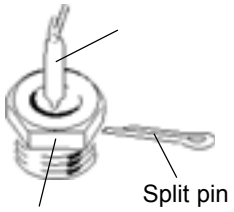

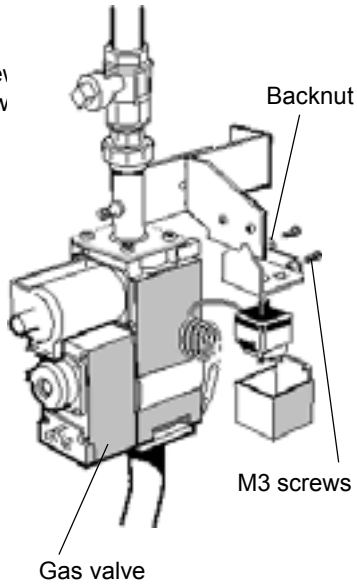

37 CONTROL SENSOR POTENTIOMETER ASSEMBLY

1. Undo the thermostat knob retaining screw and pull off the knob.
2. Remove the lower front panel. Refer to Frame 27.
3. Undo the 2 screws securing the control box front panel. Carefully lift it up and lower it.
4. Undo the backnut and washer retaining the potentiometer and pull the plug from the PCB. Pull off the connections on the potentiometer.
5. Fit the new potentiometer and reassemble in reverse order, ensuring that the connections on the back of the potentiometer are made to either the top 2 or the bottom 2 tags and that the lug on the potentiometer body locates through the hole in the front panel of the control box.

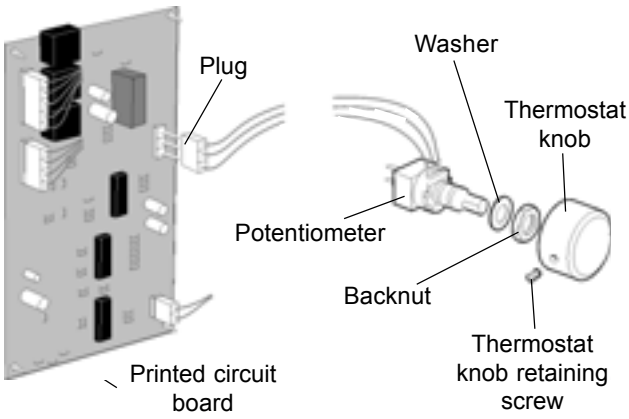

38 CONTROL SENSOR

1. Remove the lower front panel and top panel. Refer to Frame 27.
2. Remove the sensor from the thermostat pocket in the rear heat exchanger section by removing the Heyco bush.

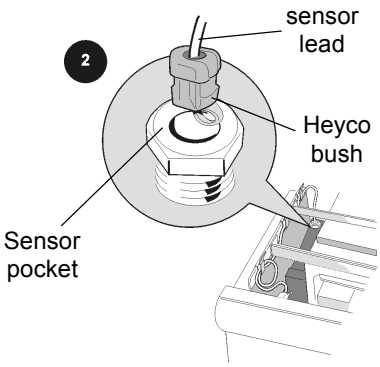

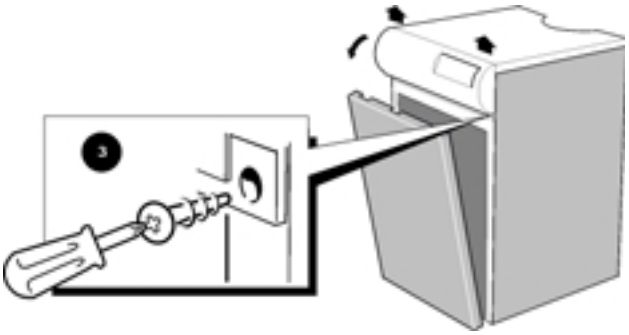

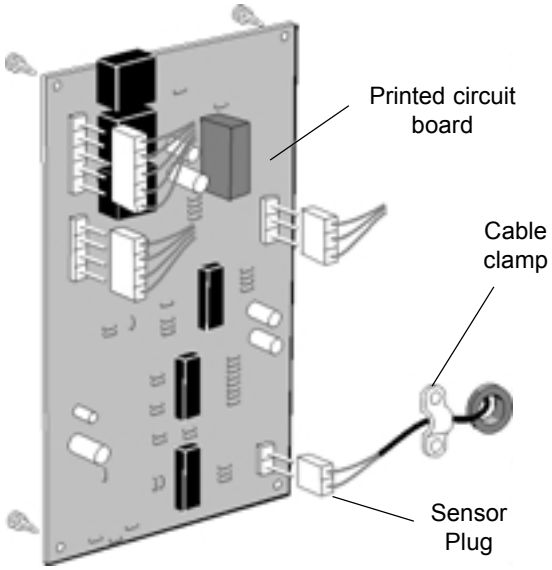

3. Slacken the 2 screws securing the control box front panel, lift it and carefully lower it.
4. Pull out the sensor plug from the printed circuit board and release cable clamp from the back panel.
5. Pull the sensor lead through the grommeted hole in the back panel and the wire clips.
6. Fit the new sensor and reassemble in reverse order, ensuring that the lead is rerouted along the casing in the clips provided.

39 CONTROL BOX - Basic Boiler, Exploded View

Printed circuit board support detail

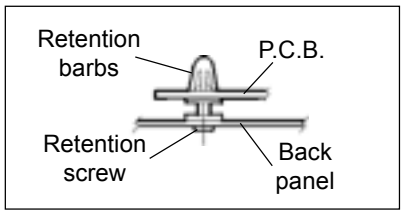

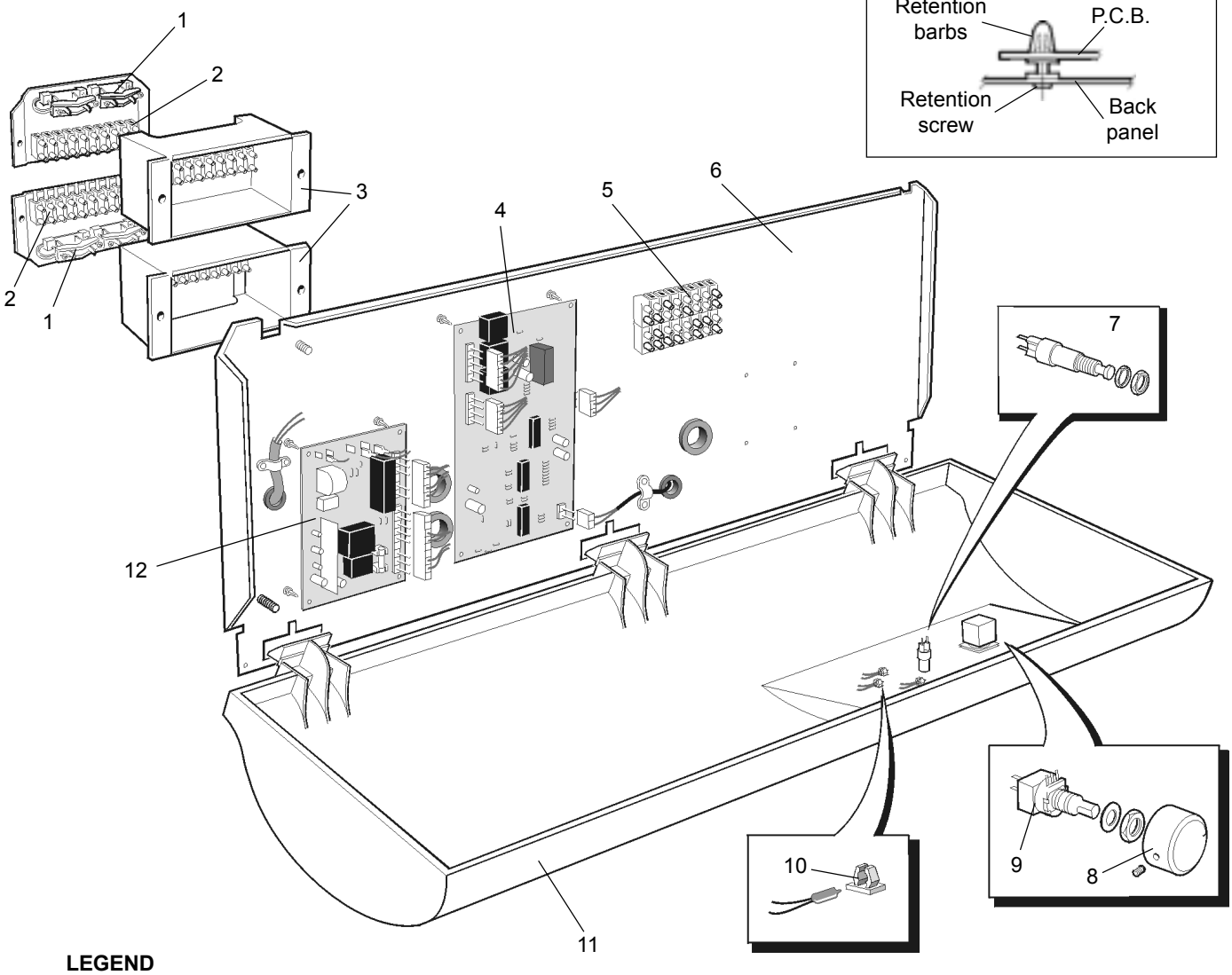

LEGEND

1. Wiring clamp.
2. Connection box plug.
3. Connection box.
4. PCB No W4115A1020
5. Terminal strip
6. Back panel
7. Lockout reset button
8. Thermostat knob
9. Potentiometer
10. Warning light lens
11. Controls box
12. PCB No.S4561B1054

40 PC BOARD NO. S4561B1054

1. Remove the lower front panel.
2. Undo the 2 screws securing the control box front panel. Carefully lift it up and lower.
3. Pull off the 2 plugs and 3 push-on connections from the board. The board can now be removed by squeezing in the retaining barbs.
4. Re-assemble in reverse order, ensuring that the push-on connections are as follows (from left to right): spark electrode, blank, earth, flame detector.

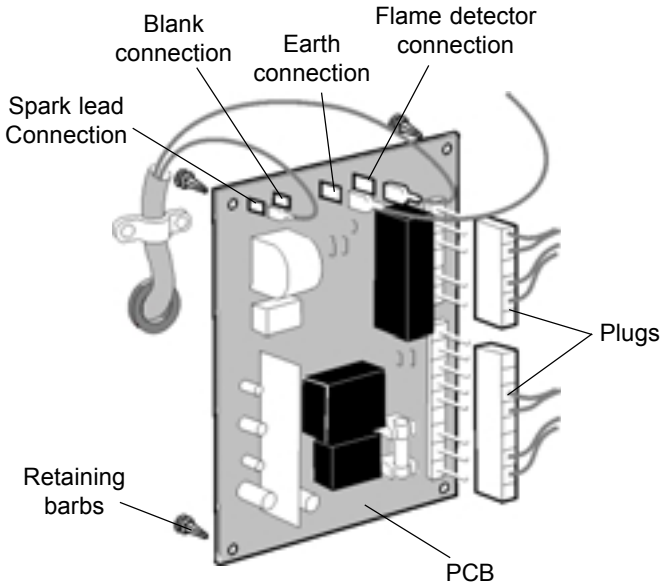

41 PC BOARD NO. W 4115A1020

1. Remove the lower front panel.
2. Undo the 2 screws securing the control box front panel. Carefully lift it up and lower it.
3. Pull off the 4 plugs from the board.
4. The board can now be removed by squeezing in the retaining barbs.
5. Fit the new board in reverse order.

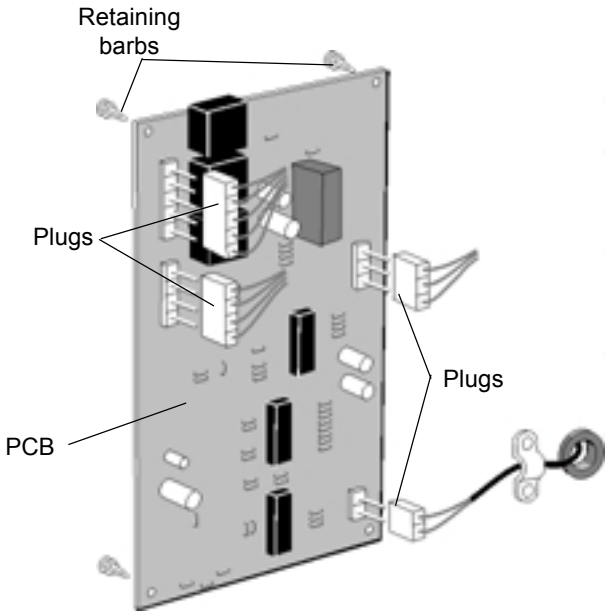

42 COMBUSTION CHAMBER INSULATION REPLACEMENT

The insulation boards used in the combustion chambers of these products contain man-made fibres, refractory fillers, organic and inorganic binders and as such are deemed to be harmless to humans.

Caradon Plumbing Limited, however, recommend that for your own comfort and to comply with good working practise the procedure described below is followed.

IMPORTANT. Turn OFF the gas and **DISCONNECT** the electricity supply.

To replace the insulation boards the major boiler components (including the heat exchanger and burners) have to be removed to gain access to the combustion chamber.

Prior to removal of the boards the following protective equipment should be worn:

- Face mask supplied with the spare part.
- Gloves supplied with the spare part.

1 Damp down the combustion chamber area containing the insulation boards.

2. Remove the insulation boards. The replacement boards are supplied in a plastic bag. This bag should be retained and the discarded boards should now be placed into it.
3. Sweep any dampened particles and place in the plastic bag.
4. Fit new insulation boards.
5. Remove the gloves and face mask and place them in the plastic bag.
6. Wash your hands and any areas of skin which may have come into contact with any of the particles from the insulation board.
7. Seal the plastic bag and dispose of it and its contents into a commercial tip.

43 INSTRUCTIONS FOR SITE ASSEMBLED BOILERS

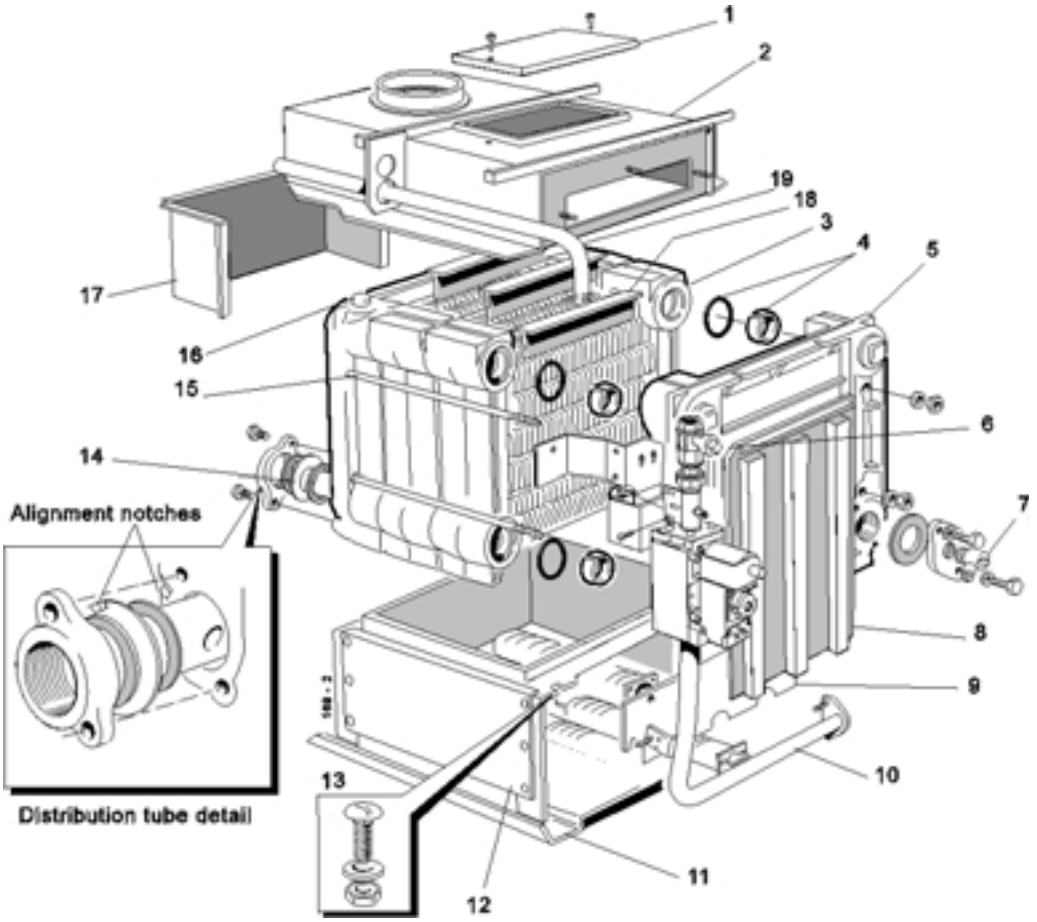

Legend

1. Cleanout cover.
2. Collector hood.
3. Middle section.
4. Section alignment rings & 'O' rings.
5. End section.
6. Gas cock.
7. Drain cock.
8. NOx duct.
9. Front plate.
10. Burner manifold assy.
11. Base plate.
12. Combustion chamber.
13. Section bolt.
14. Distribution tube.
15. Tie rods.
16. Thermostat pocket.
17. Spillage skirt.
18. Flueway baffles.
19. Gas pipe.

The site assembled boiler is supplied in the following packages:

- Combustion chamber / manifold / burner assembly.
- Platework package.
- Casing package.
- Controls box package.
- End and centre sections.

GENERAL

The installation of the boiler must be in accordance with the Gas Safety (Installation and Use) Regulations 1994, amendments 1996 or rules in force, building regulations, I.E.E. (BS.7671) Regulations and the bye-laws of the local water undertaking. It should also be in accordance with the relevant British Standard Codes of Practice together with any relevant requirements of the local Gas Region and local authority.

TOOLS REQUIRED

- Spanners
- Torque wrench
- Pozi screwdriver
- Mallet

ASSEMBLY

The combustion chamber should be positioned as near as possible to the installation site.

IMPORTANT. It must be remembered that the boiler distribution tube has to be fitted into the rear return tapping of the assembled boiler before siting.

Prior to assembling the sections it will be necessary to remove the burner and controls assembly from the combustion chamber.

Remove the assembly as follows:

1. Undo the 4 wing nuts securing the burner front plate. Pull the front plate forward from the top and lift it out.
2. The right and centre burners may now be lifted out after they have been pushed back to clear the injector.
3. In order to remove the left hand burner, the pilot gas pipe connection at the gas valve must be removed.
4. The left hand burner may now be removed by pushing it back to clear the injector and lifting it out - taking care not to damage the pilot gas pipe while the burner is out of the appliance.
5. Undo the nut securing the manifold assembly to the combustion chamber, pull the manifold assembly to the right and lift out.

44 INSTRUCTIONS FOR SITE ASSEMBLED BOILERS - continued

PREPARATION OF SECTIONS

Each section should be brushed clean on all external surfaces and any debris which may have accumulated within the section should be removed via the bottom ports.

Section assembly - refer to exploded view, Frame 43

6. Take the back section (with 1/2" BSP tappings in the top) and lift it onto the combustion chamber so that the combustion chamber back panel return is inside the section rear lip. Locate a slotted steel ring and an 'O' ring seal into each of the 4 ports. It will be necessary to squeeze the steel ring slightly to enable it to be pushed fully into the recess.

7. Lift a middle section onto the combustion chamber and carefully offer it up to the back section until it engages the projecting steel rings. It may be necessary to use a mallet and hardwood block to ensure that the steel rings are pushed fully into the recesses and that the sections are butted up to each other.

Note. *Until the final section is fitted and the tie rods fastened the sections in the assembly are not fixed together therefore CARE MUST BE TAKEN TO PREVENT the installed section coming apart.*

8. Repeat the above procedure for all of the remaining sections until the assembly is complete.

9. Fit the 4 tie rods through the holes in the sides of the end sections and fit a flat steel washer, a shakeproof washer and a nut to both ends of each tie rod. Screw up all the nuts equally, in turn, and finally tighten them to a torque of 38-41 Nm (28-30 lb. ft.).

10. Fit the distributor tube assembly as described in Frame 8. Fit the drain cock (refer to exploded view in Frame 43).

11. On open vented systems a hydraulic test should be carried out at 1 1/2 times the design pressure given in Table 2 for a period of 30 minutes.

12. On a pressurised system the test should be at twice the design pressure for a period of 30 minutes.

13. Fit the 4 coach bolts into the lugs at the bottom of the front and rear sections. Secure with the nuts and washers provided.

14. Fit the flue baffles which are located between the fins.

15. Fit the collector hood. Ensure the underside returns running across the hood sit within the front and rear section flueways. Fasten down, using the four M6 screws and nuts provided, through the front and rear fixing points.

16. Locate the fibreglass rope in the rear section grooves to form a seal with the spillage skirts. Fit the spillage skirts onto the collector hood using the self tapping screws provided.

17. Refit the manifold assembly. Position the boiler insulation over the gas line tie bracket. Fasten the bolt securing the bracket to the front section before wrapping and securing insulation around the boiler body.

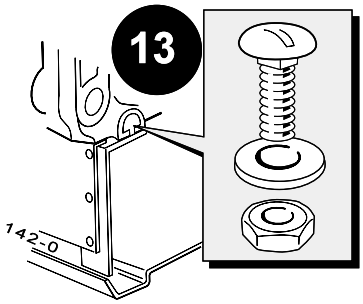

18. Insert the burner rear supports into the slots at the back of the combustion chamber. Lift the front of the burners over the injectors and pull forward to engage.

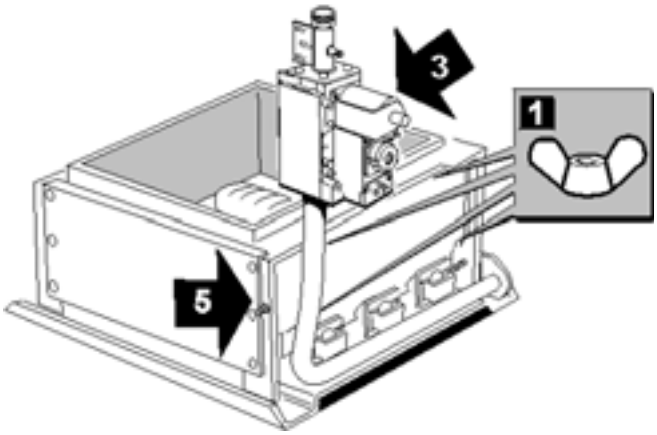

19. Fit the support angles (contained in the platework package) to the collector hood. The angle with the hole for the earth screw fits to the front.

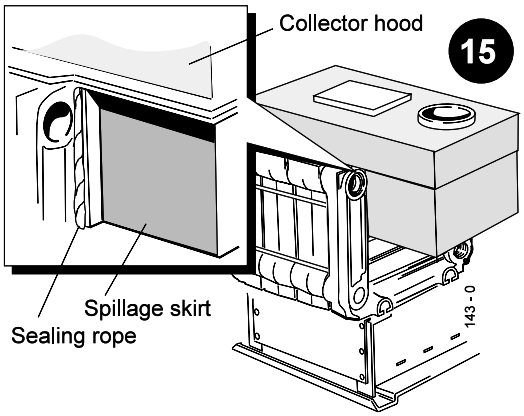

20. Fit the gas inlet pipe bracket to the rear support angle, on the LH side using the self tapping screws.

21. Fit the gas inlet pipe and make good the union between the gas cock and the valve inlet pipe.

22. Fit the NOx duct, using the reverse procedure to that shown in Frame 36, and secure with the extended nuts.

23. The boiler is now ready for installation. Go to Frame 8 and continue the installation from there.

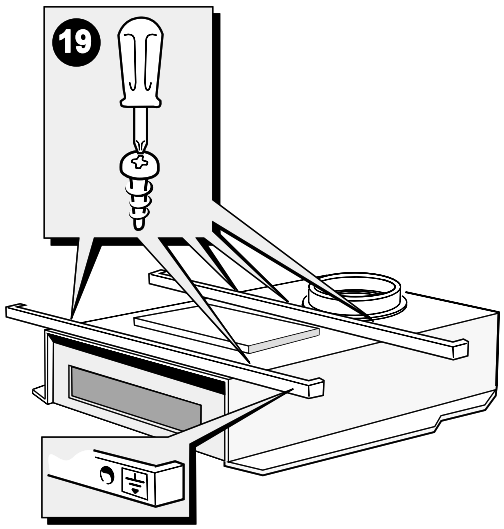

Before attempting any electrical fault finding ALWAYS carry out the preliminary electrical system checks as detailed in the Instructions for the British Gas Multimeter or other similar commercially available meter.

The preliminary electrical system checks are the FIRST electrical checks to be carried out during a fault finding procedure.

On completion of any service/fault finding task which has required the breaking and remaking of electrical connections the following checks MUST be repeated:

- **a** Earth continuity
- **b** Polarity
- **c** Resistance to earth

Detailed instructions on the replacement of faulty components are contained in the 'Servicing' section of these Installation & Servicing Instructions.

Before carrying out fault finding ensure that all external controls calling for heat and the overheat thermostat have not operated. There should be 230V ± 10% available at the control box connection.

45 PILOT WILL NOT LIGHT

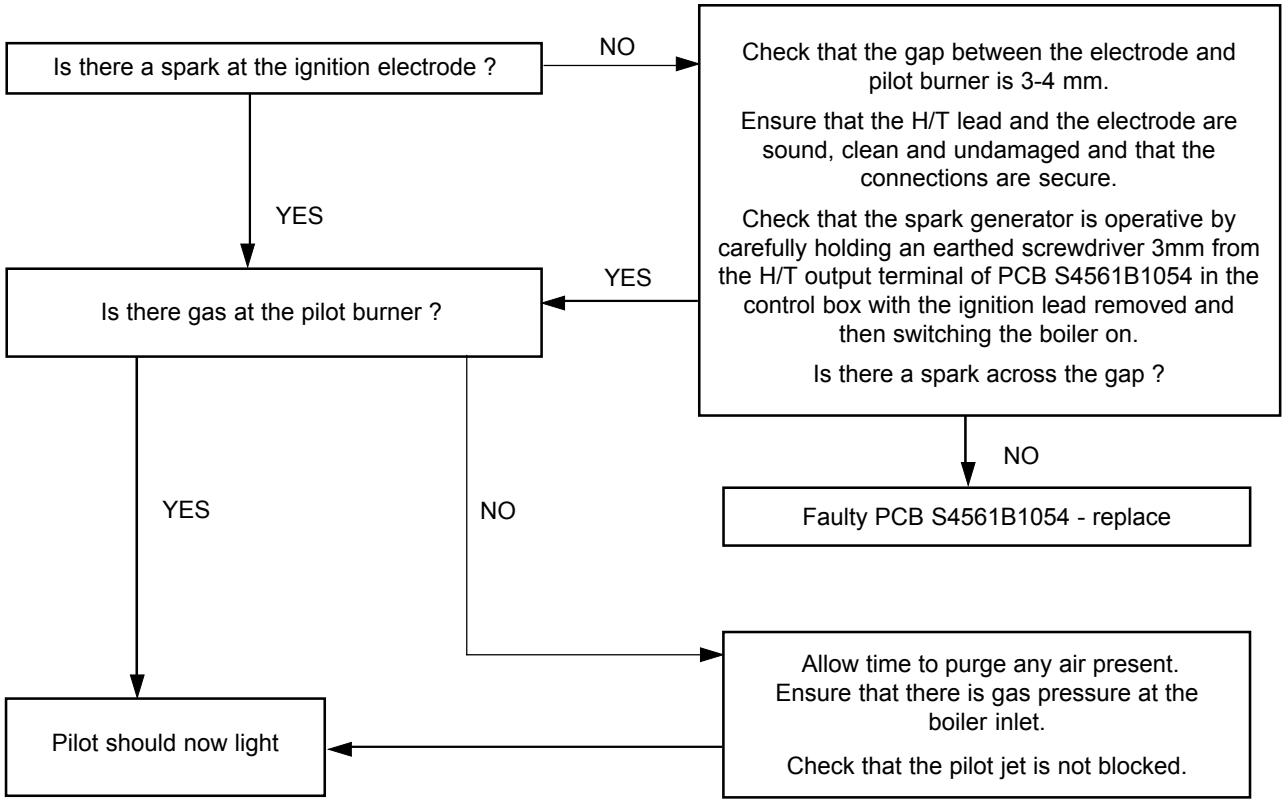

46 PILOT WILL NOT STAY LIT

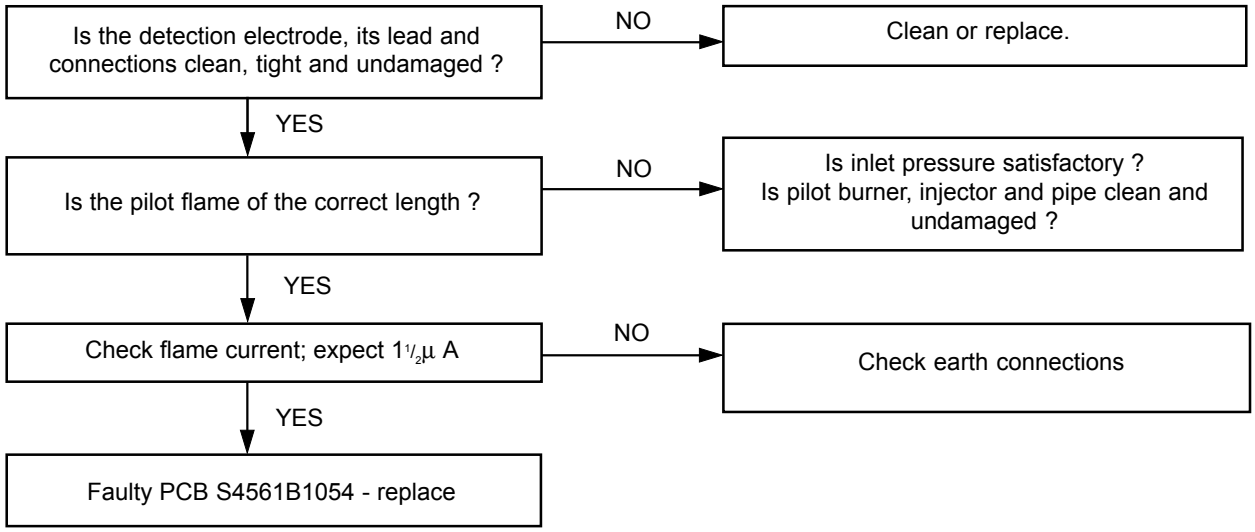

47 PILOT LIT BUT NO MAINS GAS

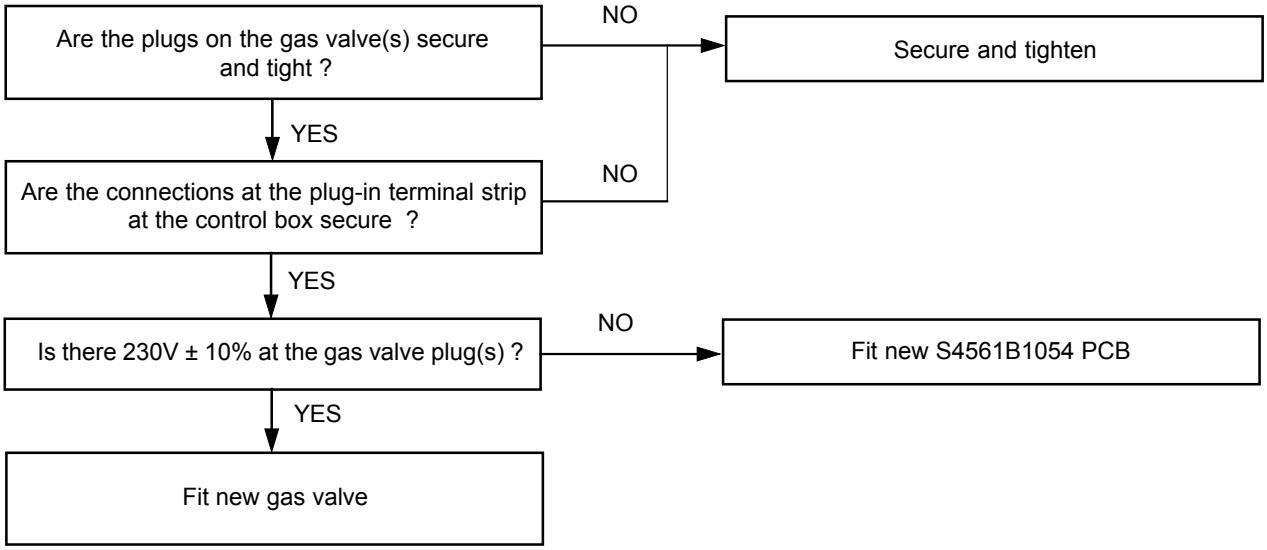

48 BOILER GOES OUT ON OVERHEAT THERMOSTAT

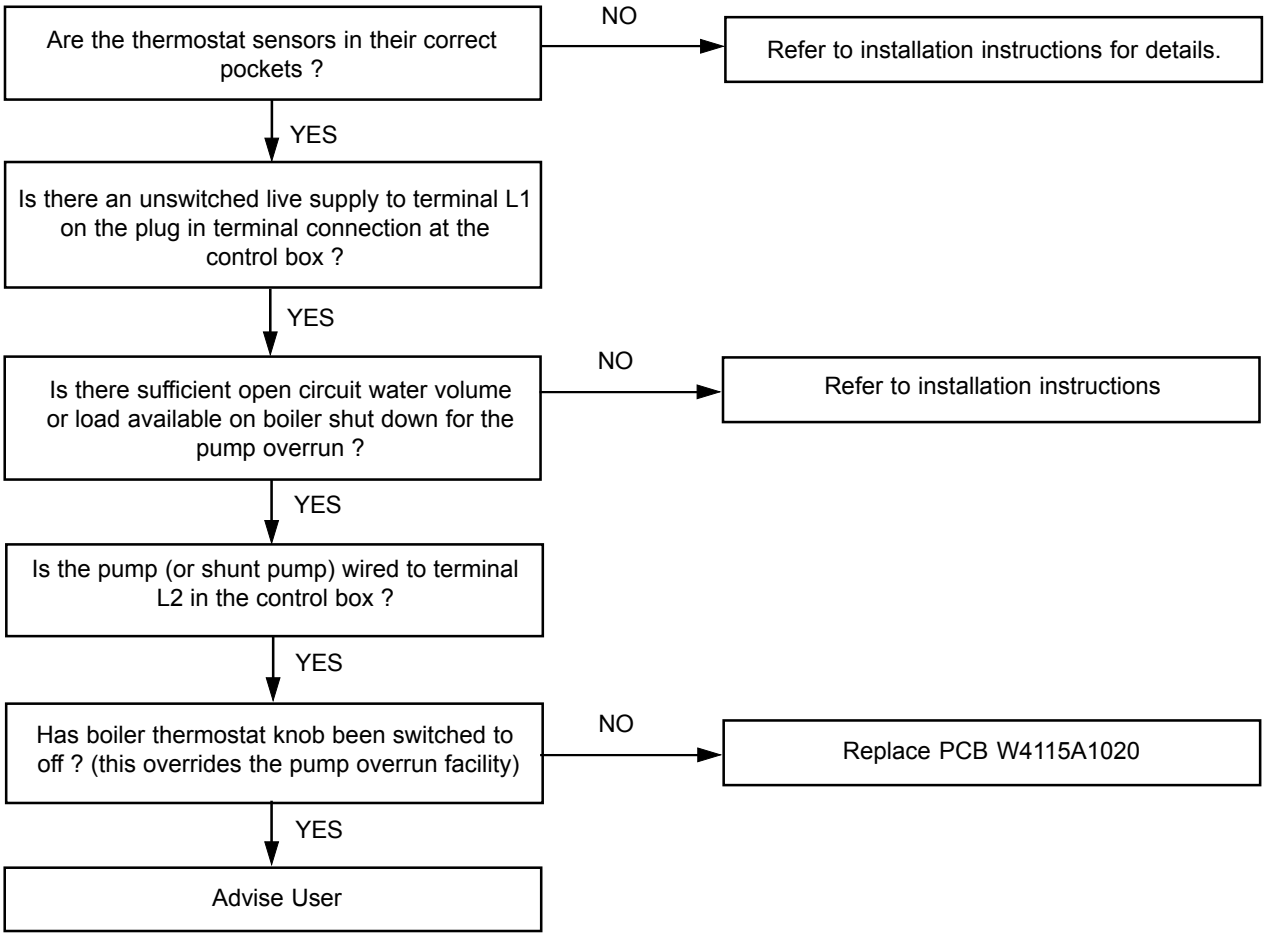

SHORT LIST OF PARTS

The following are parts commonly required as replacements, due to damage or expendability.

Their failure or absence is likely to affect the safety and/or performance of this appliance.

When ordering spare parts please quote:

1. Boiler model
2. Boiler serial no. (refer to the data plate on the combustion chamber)
3. Boiler B.G. P.I. No. (refer to the data plate on the combustion chamber)
4. Description
5. Quantity
6. Product no.

Key No.	Description	Qty.	Product No.
12D	Boiler body insulation ..... CXAP 40	1	150 093
	..... CXAP 50/60	1	150 094
	..... CXAP 70/80	1	150 095
	..... CXAP 90/100	1	150 096
23	LH main burner ..... Worgas 0.087.751 CXAP 40	1	150 153
	..... Worgas 0.087.753 CXAP 50/60	1	150 154
	..... Worgas 0.087.755 CXAP 70/80	1	150 155
	..... Worgas 0.087.757 CXAP 90/100	1	150 156
24	Centre & RH main burners ..... Worgas 0.087.750 CXAP 40	2	150 149
	..... Worgas 0.087.752 CXAP 50/60	2	150 150
	..... Worgas 0.087.754 CXAP 70/80	2	150 151
	..... Worgas 0.087.756 CXAP 90/100	2	150 152
26	Main burner injectors ..... Size 2.15mm; CXAP 40	3	013 569
	..... Size 2.3mm; CXAP 50	3	013 570
	..... Size 2.54mm; CXAP 60	3	013 571
	..... Size 2.69mm; CXAP 70	3	013 572
	..... Size 2.96mm; CXAP 80	3	013 573
	..... Size 3.09mm; CX AP 90	3	013 574
	..... Size 3.27mm; CXAP 100	3	013 575
27	Pilot burner - HONEYWELL Q 349 A1067 complete with 0.23P injector	1	077 106
28	Pilot burner injector - HONEYWELL 0.23P	1	004 590
29	Gas control valve - HONEYWELL V4601 AB 1034	1	154 930
	Gas control valve - HONEYWELL VR4605 AB 1019 (CXAP 90 - 100)	1	154 931
29D	Gas valve plugs and lead assy. CXAP 40 -100	1	154 733
29E	Gas valve plugs and lead assy. CXAP 90 -100	1	112 431
29F	Gas valve plugs and lead assy. CXAP 90 -100	1	139 269
32	Ignition electrode and HT lead assy. - VERNITRON	1	
33	Flame detector lead	1	002 937
34	Boiler status neons ..... Burner on	1	154 854
	..... Overheat	1	154 855
	..... Lockout	1	154 855
35	Lockout reset button	1	004 346
37	Electronic thermostat sensor & lead assembly	1	154 816
38	Thermostat potentiometer assembly	1	154 850

SHORT LIST OF PARTS

Key No.	Description		Qty.	Product No.
39	Thermostat knob		1	-
40	Overheat thermostat / bracket assembly - RAK		1	-
41	Control box assembly, complete		1	-
42	Printed circuit board S4561B1054		1	154 813
43	Printed circuit board W4115A1020		1	154 815
48	Right hand casing side panel - white stove enamel	CXAP 40	1	111 650
		CXAP 50	1	111 651
		CXAP 60	1	111 651
		CXAP 70	1	111 652
		CXAP 80	1	111 652
		CXAP 90/100	1	111 653
49	Left hand casing side panel - white stove enamel	CXAP 40	1	111 650
		CXAP 50	1	111 651
		CXAP 60	1	111 651
		CXAP 70	1	111 652
		CXAP 80	1	111 652
		CXAP 90/100	1	111 653
50	Casing top panel - white stove enamel	CXAP 40	1	111 293
		CXAP 50	1	111 294
		CXAP 60	1	111 295
		CXAP 70	1	111 296
		CXAP 80	1	111 297
		CXAP 90/100	1	111 298
51	Casing lower front panel - white stove enamel complete with lighting instructions.		1	
52	Casing upper front control panel (less controls) - white stove enamel		1	
53	Casing assembly, complete - white stove enamel	CXAP 40	1	
		CXAP 50	1	
		CXAP 60	1	
		CXAP 70	1	
		CXAP 80	1	
		CXAP 90/100	1	

Caradon Plumbing Limited, P.O. Box 103, National Ave, Kingston upon Hull, HU5 4JN. Telephone: 01482 492 251 Fax: 01482 448 858. Registration No. London 322 137. Registered Office: National Avenue, Kingston upon Hull, HU5 4JN. *A subsidiary of Caradon plc*

Technical Training

The Caradon Plumbing Limited Technical Training Centre offers a series of first class training courses for domestic, commercial and industrial heating installers, engineers and system specifiers.

For details of courses please ring: *01270 413624*

Caradon Plumbing Limited pursues a policy of continuing improvement in the design and performance of its products. The right is therefore reserved to vary specification without notice.

May 2000 154 869 AO1

BOILERS Ideal

Ideal Installer/Technical Helpline: 01482 498376